BRAKING SYSTEM

OUTLINE ..... **11— 2**
OUTLINE OF CONSTRUCTION ..... **11— 2**
STRUCTURAL VIEW ..... **11— 2**
IMPROVEMENT OF BRAKING SYSTEM .... **11— 3**
ANTI-LOCK BRAKE SYSTEM (ABS)..... **11— 4**
SYSTEM DIAGRAM ..... **11— 5**
MAJOR COMPONENTS AND FUNCTION . **11— 6**
ADVANTAGES OF ANTI-LOCK BRAKE SYSTEM..... **11— 7**
PRINCIPLES OF ANTI-LOCK BRAKE SYSTEM..... **11— 8**
BRAKING CHARACTERISTICS ..... **11— 9**
OUTLINE OF ANTI-LOCK BRAKE OPERATION ..... **11—10**
SYSTEM DIAGRAM ..... **11—11**
HYDRAULIC UNIT..... **11—12**
PUMP ..... **11—13**
ACCUMULATOR..... **11—14**
SOLENOID VALVE ..... **11—15**
RELIEF VALVE ..... **11—16**
CONTROL PISTON AND CUT-OFF VALVES **11—17**
PROPORTIONING VALVE..... **11—18**
ELECTRICAL SYSTEM ..... **11—19**
CONTROL UNIT ..... **11—20**
WHEEL-SPEED SENSOR..... **11—21**
PRESSURE SWITCH..... **11—23**
RELAY BOX ..... **11—24**
ABS CONTROL SYSTEM ..... **11—25**
OPERATION OF ANTI-LOCK BRAKE SYSTEM..... **11—26**
ANTI-LOCK BRAKE WARNING LIGHT ..... **11—30**
TROUBLESHOOTING GUIDE ..... **11—32**

86U11X-501

OUTLINE

OUTLINE OF CONSTRUCTION

1. As in the past, there are two types of rear brake systems: drum- and disc-type.
2. In order to improve braking performance of the four-wheel disc brake system, the diameter of the rear disc plates is enlarged.
3. In order to reduce weight, an aluminum alloy master cylinder and a dual proportioning valve (Non-ABS) are used.
4. A new anti-lock brake system (ABS) is available.

STRUCTURAL VIEW

Front disc, rear drum brake model

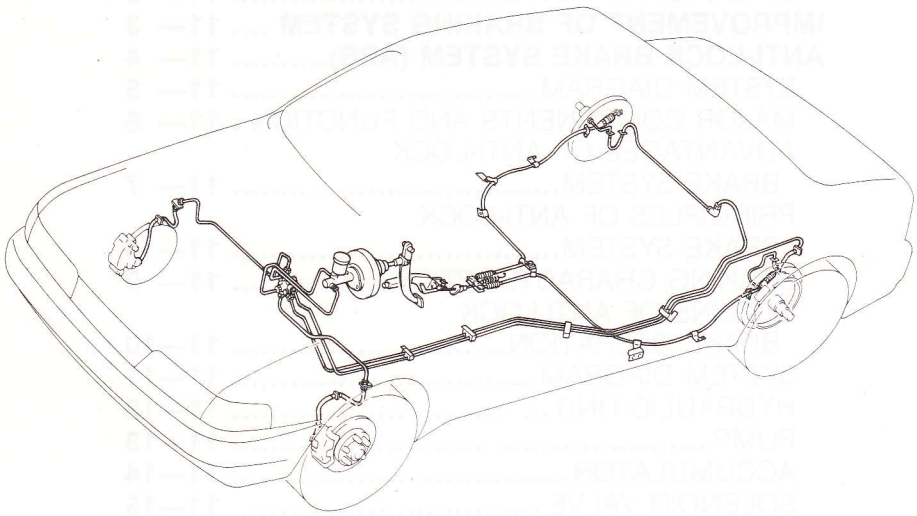

4-wheel disc brake model

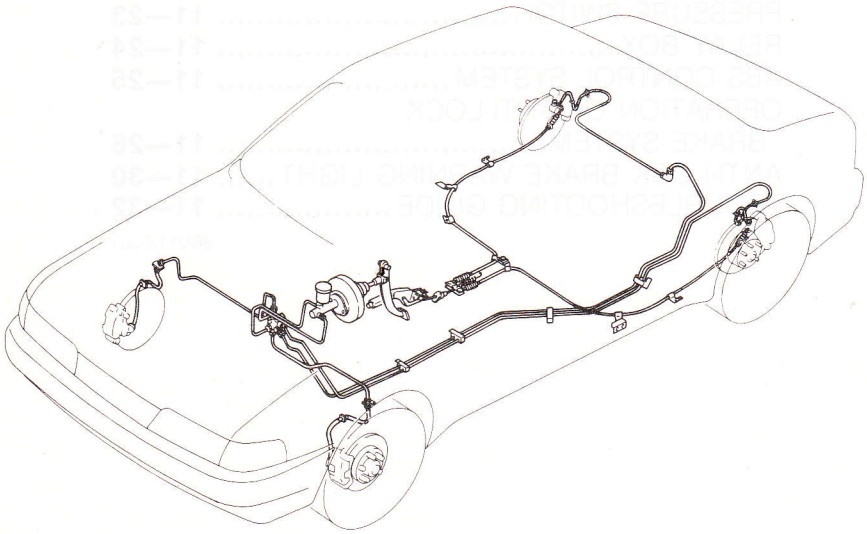

86U11X-502

IMPROVEMENT OF BRAKING SYSTEM

Item	Model	New	Previous	Effect
Front caliper	Type	Mounting support	Integral	Reduced braking noise
Front disc plate	Type	Ventilated	Ventilated	Improved cooling performance and fade resistance
	Outer diameter mm (in)	264 (10.4)	250 (9.8) 14 in wheel vehicle 229 (9.0) 13 in wheel vehicle	
	Thickness mm (in)	24 (0.9)	20 (0.8)	
	Effective diameter mm (in)	216 (8.5)	204 (8) 14 in wheel vehicle 178 (7) 13 in wheel vehicle	Improved braking performance
Rear caliper	Type	Mounting support	Semi-integral	Reduced braking noise
Rear disc plate	Type	Solid	←	—
	Outer diameter mm (in)	259 (10.20)	←	—
	Thickness mm (in)	10 (0.39)	←	—
Master cylinder	Inner diameter mm (in)	22.22 (0.875)	←	Weight reduced
Rear drum brake	Inner diameter mm (in)	228.6 (9)	200 (7.874)	Improved braking performance and improved heat dispersion
	Width mm (in)	30 (1.2)	25 (1.0)	
Dual proportioning valve (Non-ABS)	Hydraulic pressure effective point kPa (kg/cm^2, lb/m^2)	2,942 (30, 427)	1,961 (20, 284)	Weight reduced

86U11X-503

ANTI-LOCK BRAKE SYSTEM (ABS)

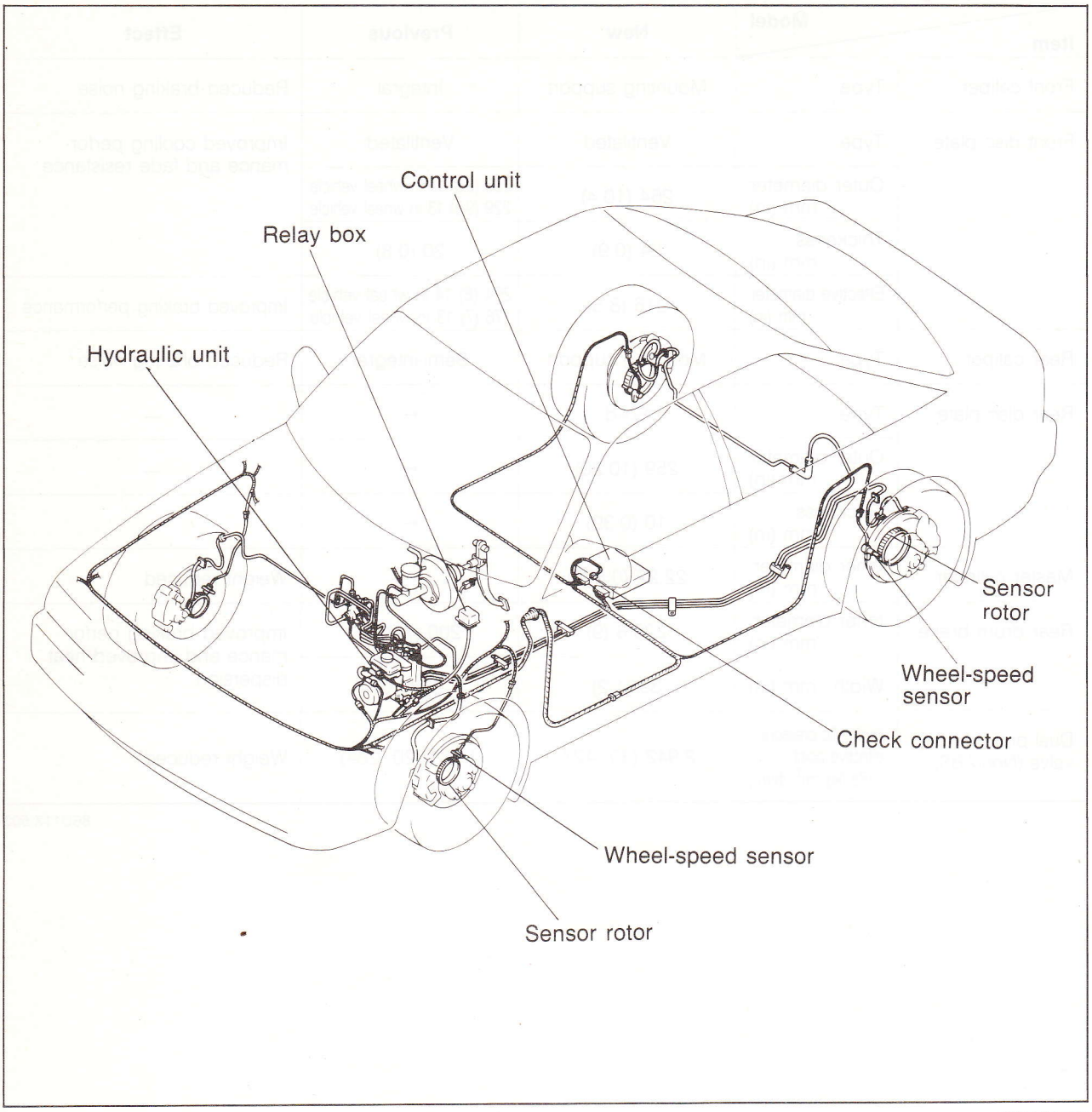

86U11X-504

The ABS is an electronically-controlled brake system that controls brake pressure to maintain directional stability and steerability during braking, and with the right conditions, reduce stopping distance. The ABS does this by sensing the amount of wheel slippage during sudden braking or during braking on slippery road surfaces. This ABS is an independent front wheel control, rear axle control (select low control), four-sensor, 3-channel system. The basic components are the hydraulic unit, control unit, and four wheel-speed sensors.

Note
Select low control is a method that controls the brake hydraulic pressure of both rear wheels by comparing rear wheel speeds and then controlling the hydraulic pressure based on the side which is in greater danger of locking.

SYSTEM DIAGRAM

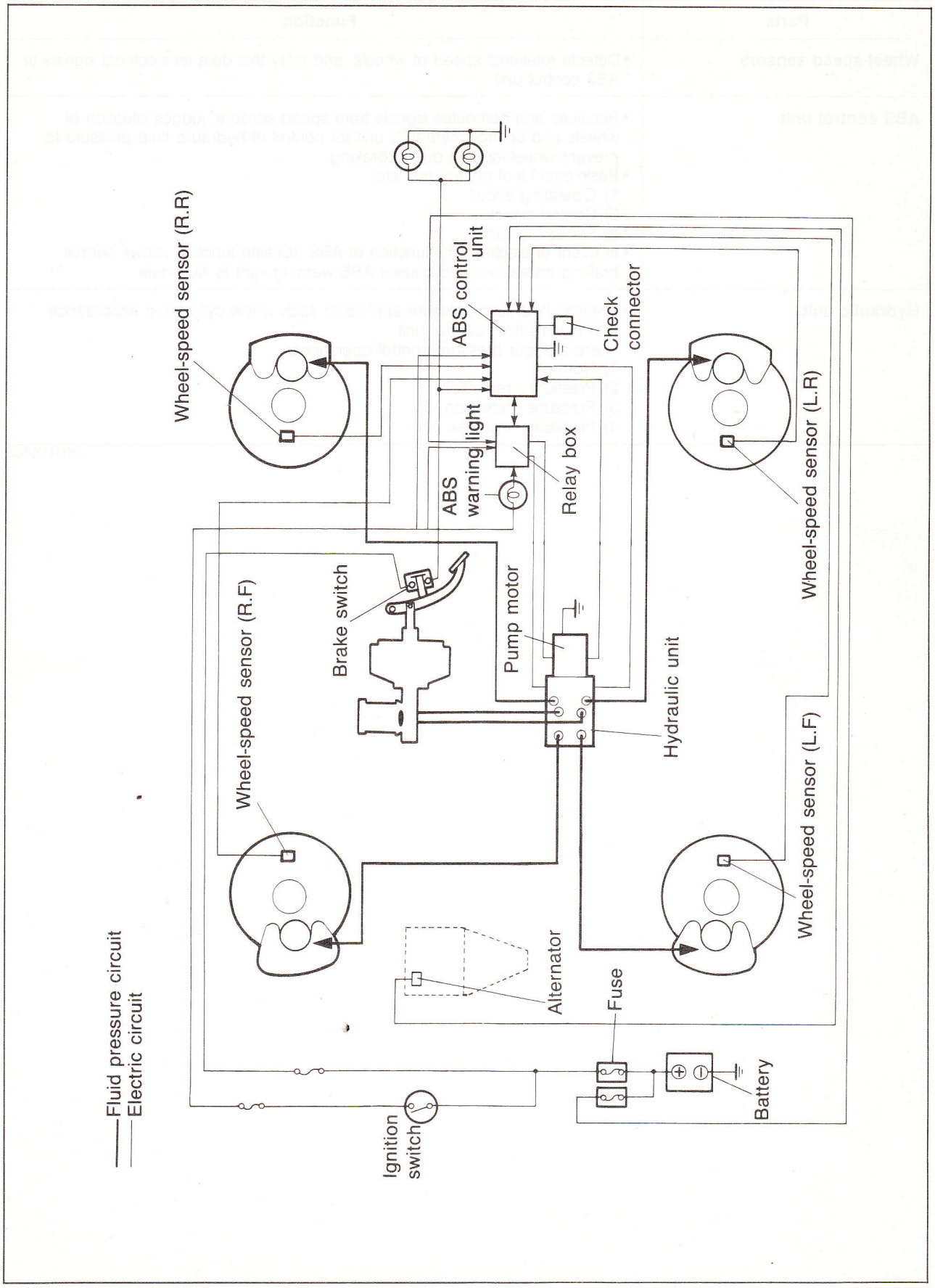

77U11X-504

MAJOR COMPONENTS AND FUNCTION

Parts	Function
Wheel-speed sensors	• Detects rotational speed of wheels, and relay this data as electrical signals to ABS control unit
ABS control unit	• Receives and computes signals from speed sensors; judges situation of wheels and controls hydraulic unit for control of hydraulic fluid pressure to prevent wheel lock-up during braking • Basic circuits of control unit are: 1) Operating circuit 2) Control circuit 3) Fail-safe circuit • In event of electrical malfunction of ABS, fail-safe function allows normal braking operations and causes ABS warning light to illuminate
Hydraulic unit	• Controls hydraulic pressure applied to each wheel cylinder in accordance with signals from control unit There are four pressure control operations: 1) Normal 2) Pressure - reduction 3) Pressure - retention 4) Pressure - increase

86U11X-505

ADVANTAGES OF ANTI-LOCK BRAKE SYSTEM

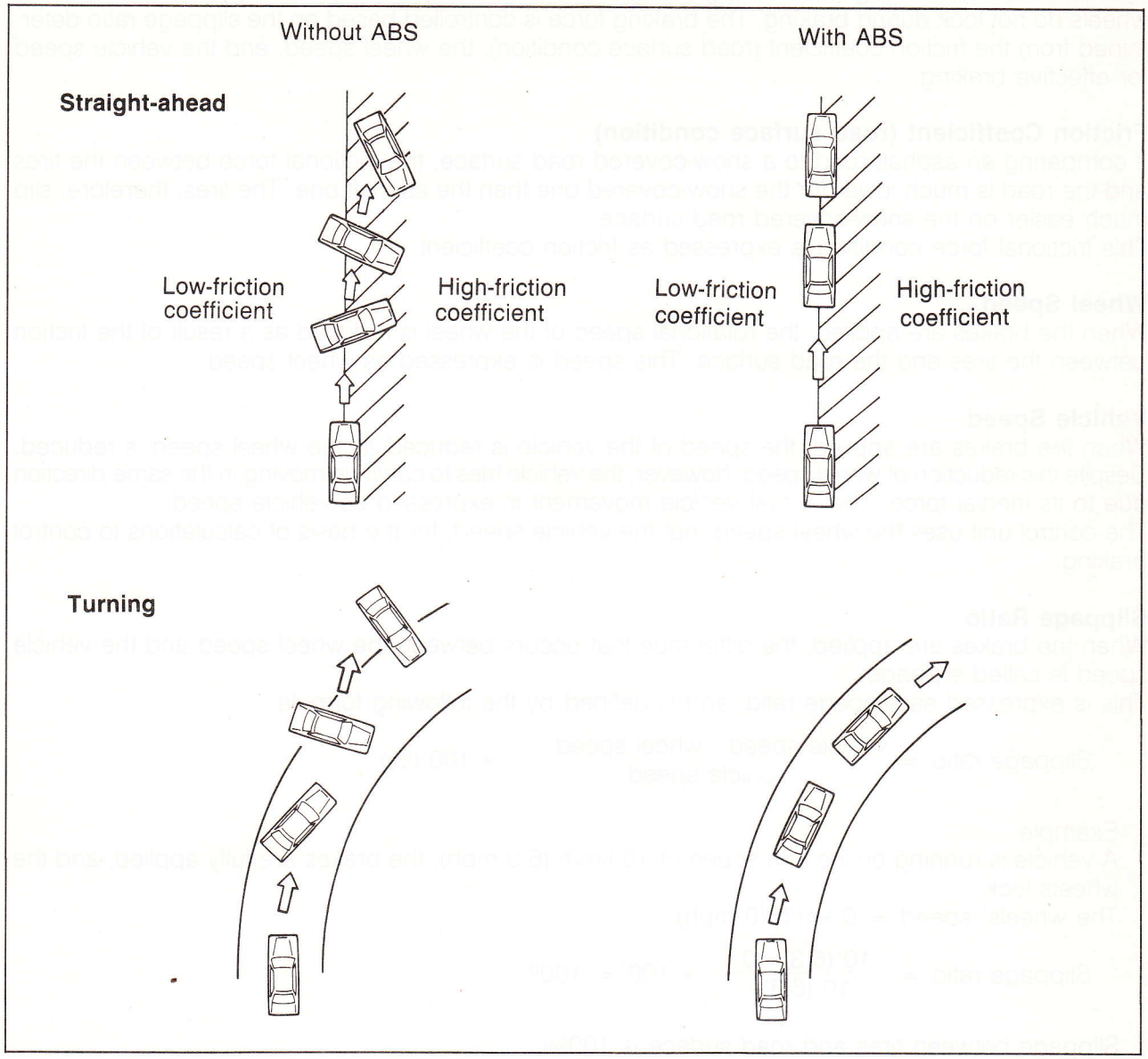

86U11X-506

During straight-ahead travel on a slippery road surface (low-friction coefficient) on one side
Without ABS
When the brakes are applied during straight-ahead travel, the wheels on the slippery surface lock and the front of the vehicle veers toward the side of the road with the highest friction coefficient. Thus causing a spin.
With ABS
Because the braking force is controlled in such a way that the wheels do not lock when the brakes are applied, the vehicle does not spin during braking and, as an added benefit, the braking distance is usually shortened.

During a turn on a slippery road surface (low-friction coefficient)
Without ABS
When the brakes are applied suddenly, the wheels lock and the vehicle veers in the direction of the turn, thus resulting in a spin.
With ABS
Because the braking force is controlled in such a way that the wheels do not lock, steering performance is maintained and the vehicle can be driven around the turn.

PRINCIPLES OF ANTI-LOCK BRAKE SYSTEM

The ABS controls braking force through control of the brake system hydraulic pressure so that the wheels do not lock during braking. The braking force is controlled based on the slippage ratio determined from the friction coefficient (road surface condition), the wheel speed, and the vehicle speed for effective braking.

Friction Coefficient (road surface condition)

If comparing an asphalt road to a snow-covered road surface, the frictional force between the tires and the road is much lower for the snow-covered one than the asphalt one. The tires, therefore, slip much easier on the snow-covered road surface.
This frictional force condition is expressed as friction coefficient.

Wheel Speed

When the brakes are applied, the rotational speed of the wheel is reduced as a result of the friction between the tires and the road surface. This speed is expressed as wheel speed.

Vehicle Speed

When the brakes are applied, the speed of the vehicle is reduced as the wheel speed is reduced. Despite this reduction of wheel speed, however, the vehicle tries to continue moving in the same direction due to its inertial force. This actual vehicle movement is expressed as vehicle speed.
The control unit uses the wheel speed, not the vehicle speed, for the basis of calculations to control braking.

Slippage Ratio

When the brakes are applied, the difference that occurs between the wheel speed and the vehicle speed is called slippage.
This is expressed as slippage ratio, and is defined by the following formula:

$$\text{Slippage ratio} = \frac{\text{vehicle speed - wheel speed}}{\text{vehicle speed}} \times 100\ (\%)$$

Example:
A vehicle is running on ice at a speed of 10 km/h (6.3 mph), the brakes are fully applied, and the wheels lock:
The wheels' speed = 0 km/h (0 mph)

$$\text{Slippage ratio} = \frac{10\ (6.3) - 0}{10\ (6.3)} \times 100 = 100\%$$

Slippage between tires and road surface is 100%.

86U11X-507

BRAKING CHARACTERISTICS

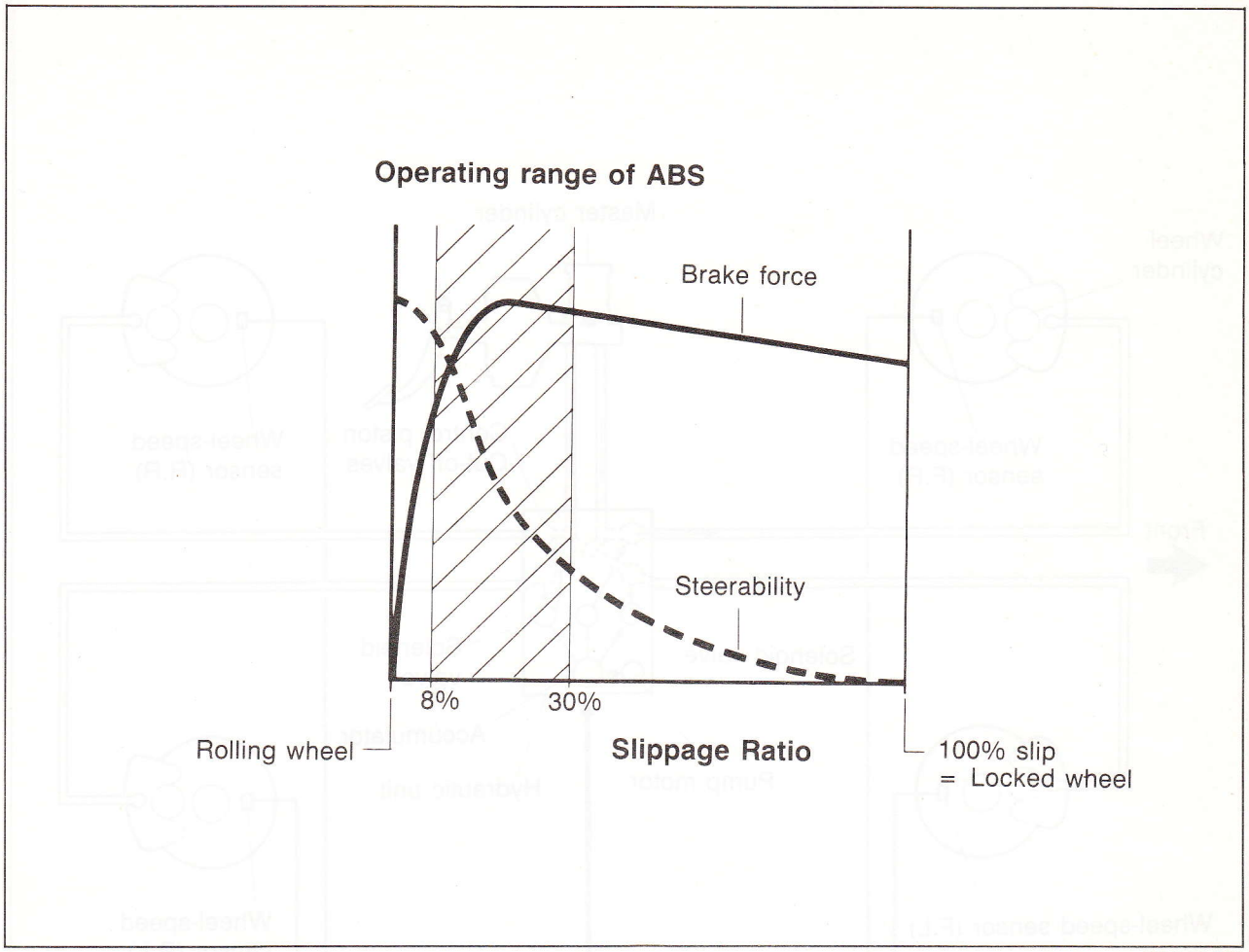

86U11X-508

When the brakes are applied, the braking force applied to the road surface increases sharply, reaching a maximum point, after which it decreases due to slippage.
When the brakes are applied, the wheel speed decreases.
The wheel speed becomes less than the vehicle speed, and this causes the slippage between the road surface and the tire.
Braking force depends upon the coefficient of slippage between the tire and the road surface.
Braking forces can effectively slow a vehicle within the slippage ratio range of 8%—30%.
Within this range, steerability is sufficient to steer the vehicle during full-braking application because the tires are still gripping the road surface.

OUTLINE OF ANTI-LOCK BRAKE OPERATION

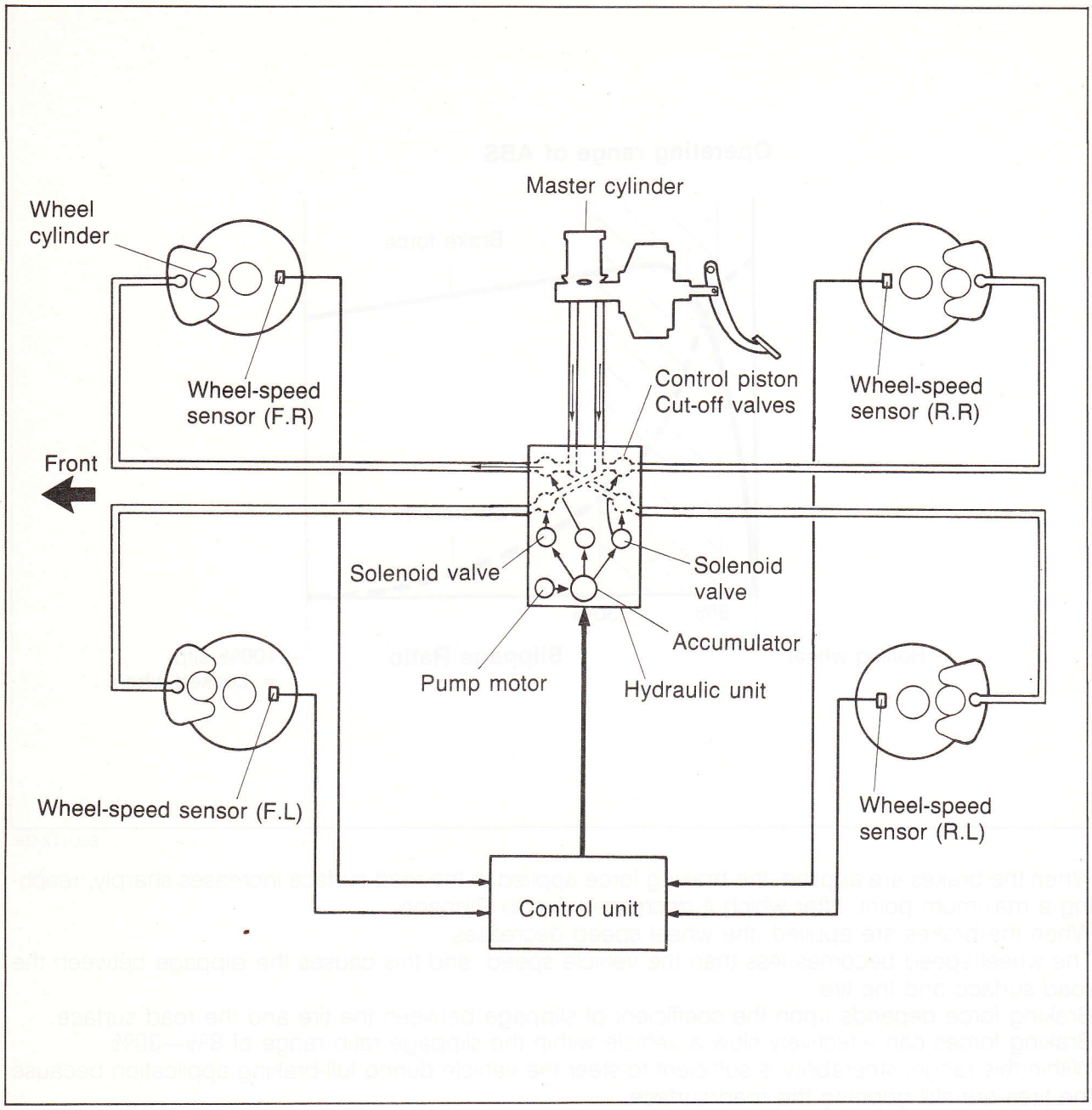

86U11X-509

The wheel-speed sensors constantly send wheel-speed signals to the control unit. Based on these signals, the control unit controls operation of the solenoid valves and pump motor of the hydraulic unit. When ABS isn't operated (normal braking), brake fluid from the master cylinder passes freely through the hydraulic unit to the wheel cylinders.

When ABS is operated, brake fluid from the master cylinder is stopped in the hydraulic unit, and the hydraulic pressure of the wheel cylinders is controlled by the control pistons, in the hydraulic unit. The hydraulic pressure to the front wheels is adjusted individually. The pressure to the rear wheels, however, is adjusted simultaneously. This adjustment of the rear wheels is determined from the particular wheel which is about to lock. This is the 3-channel control system; individual control for the front wheels and dual control for the rears.

SYSTEM DIAGRAM

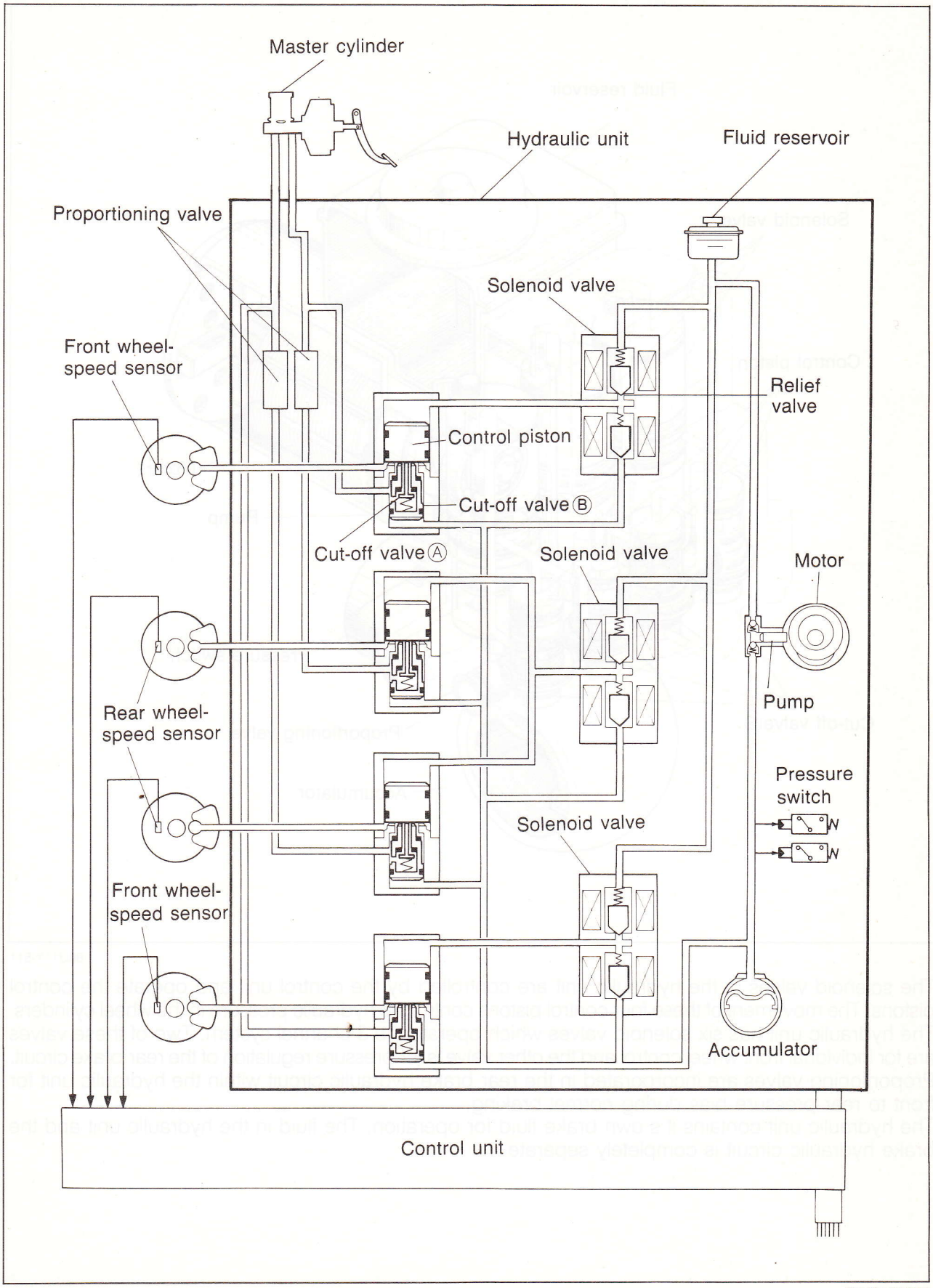

86U011X-510

HYDRAULIC UNIT

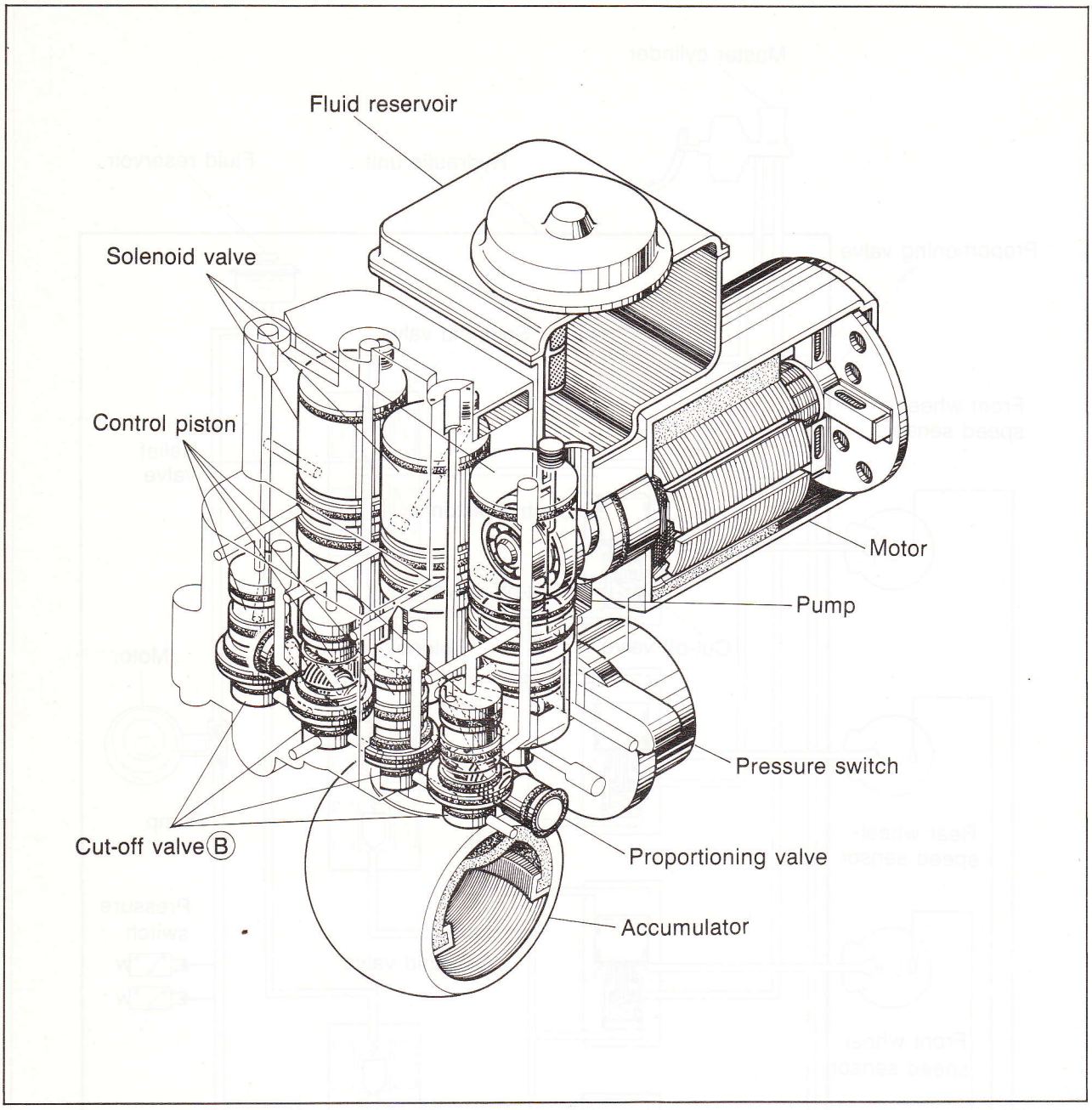

86U11X-511

The solenoid valves in the hydraulic unit are controlled by the control unit and operate the control pistons. The movement of these four control pistons control the hydraulic pressure in the wheel cylinders. The hydraulic unit has six solenoid valves which operate the 3-channel system. Two of these valves are for individual front wheel control and the other valve is for pressure regulation of the rear brake circuit. Proportioning valves are incorporated in the rear brake hydraulic circuit within the hydraulic unit for front to rear pressure bias during normal braking.
The hydraulic unit contains it's own brake fluid for operation. The fluid in the hydraulic unit and the brake hydraulic circuit is completely separate.

PUMP

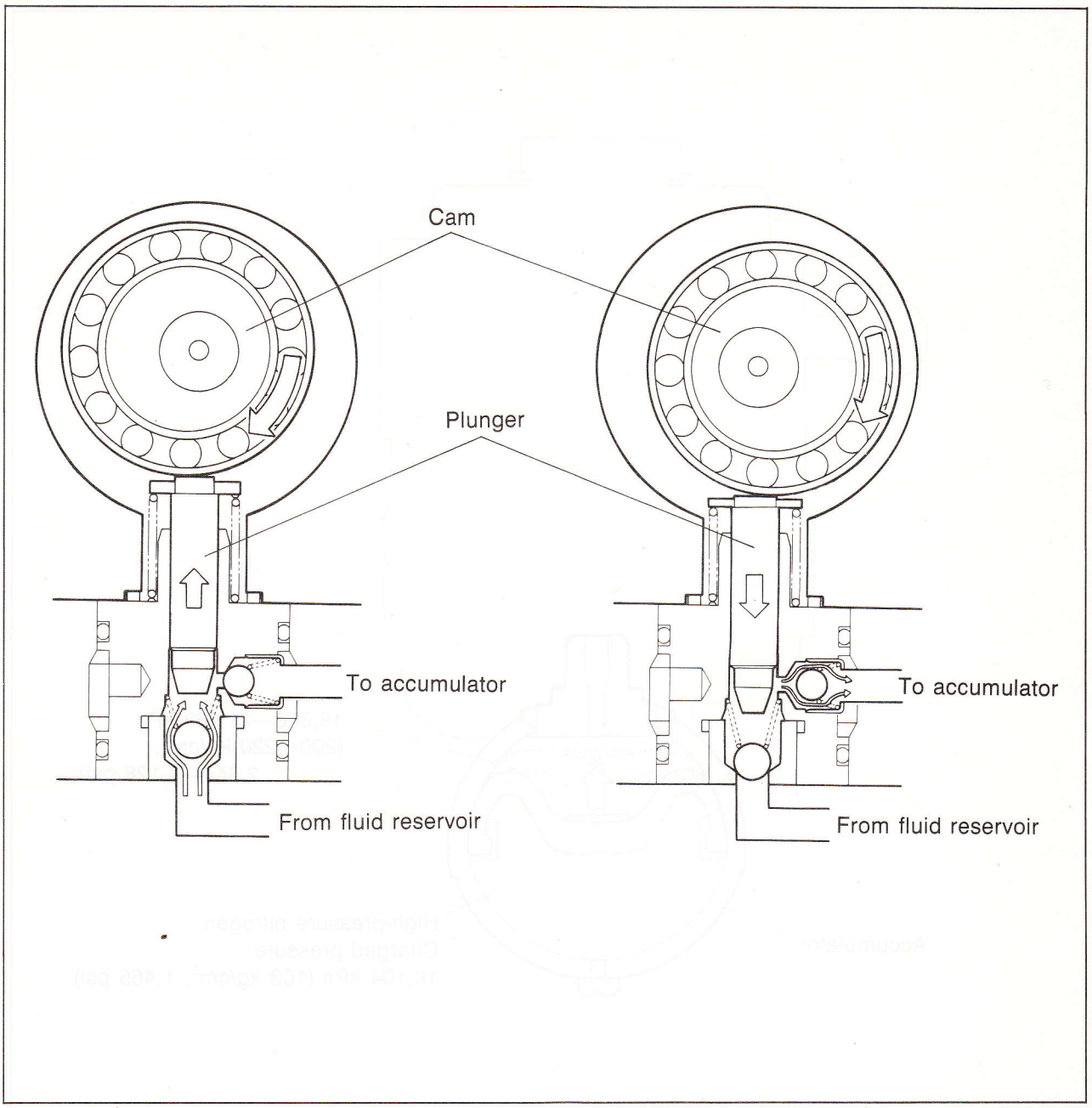

86U11X-512

The motor rotates when an order from the control unit or pressure switch is received. The motor rotation is converted to up-and-down movement of the plunger by the cam.
As the plunger moves up, the fluid reservoir check ball opens and fluid is pulled in from the reservoir.
As the plunger moves down, the accumulator check ball opens and fluid is pumped into the accumulator.

ACCUMULATOR

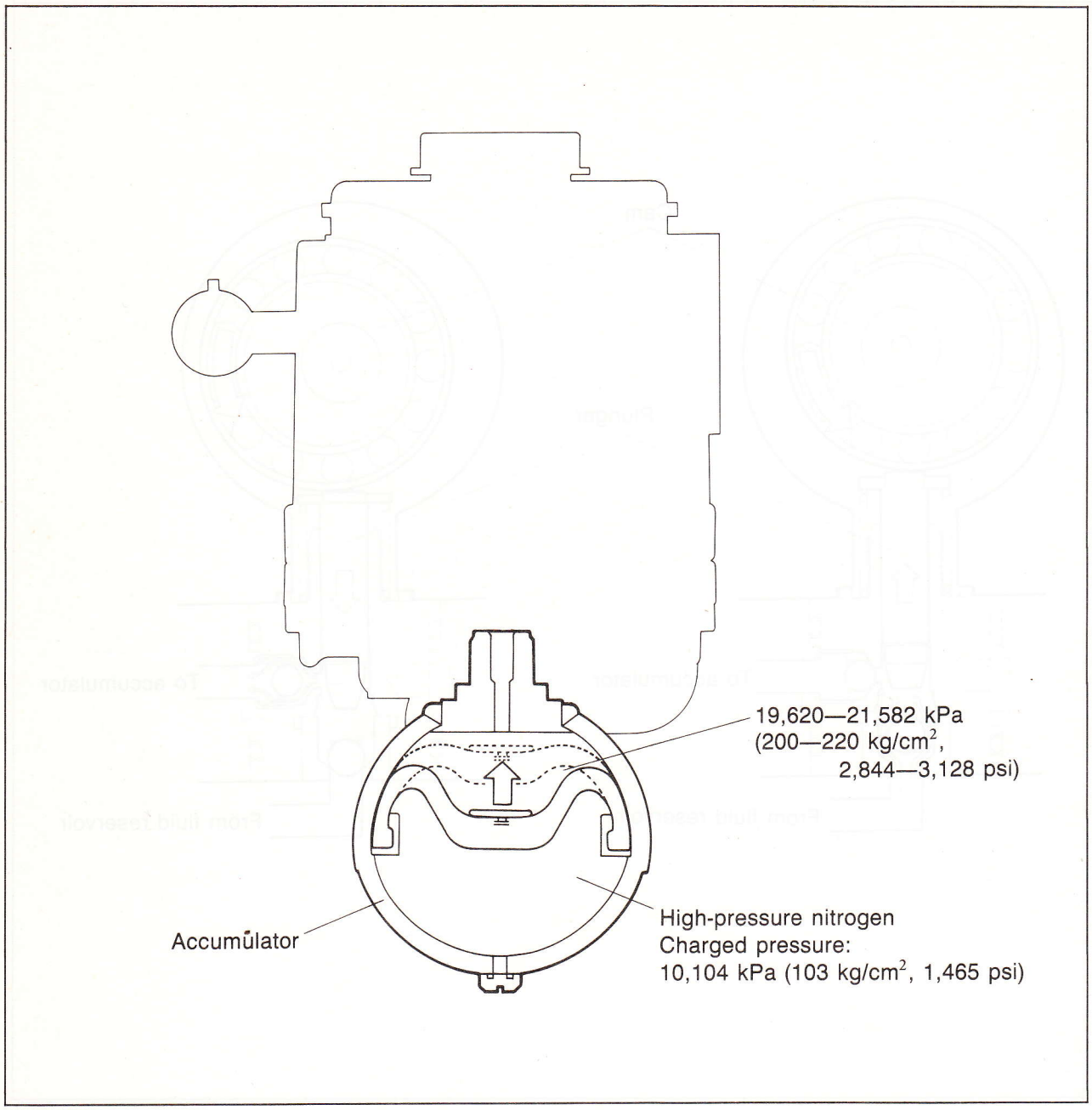

86U11X-513

The accumulator contains high-pressure nitrogen gas and a rubber diaphragm.
It accumulates the high hydraulic pressure created by the pump. When hydraulic pressure in the hydraulic unit lowers due to ABS operation, the hydraulic pressure accumulated in the accumulator is forced back through the system by the high-pressure gas and the diaphragm.
The pump maintains the accumulator pressure at approximately **19,620 to 21,582 kPa (200—220 kg/cm^2, 2,844—3,128 psi)**.

SOLENOID VALVE

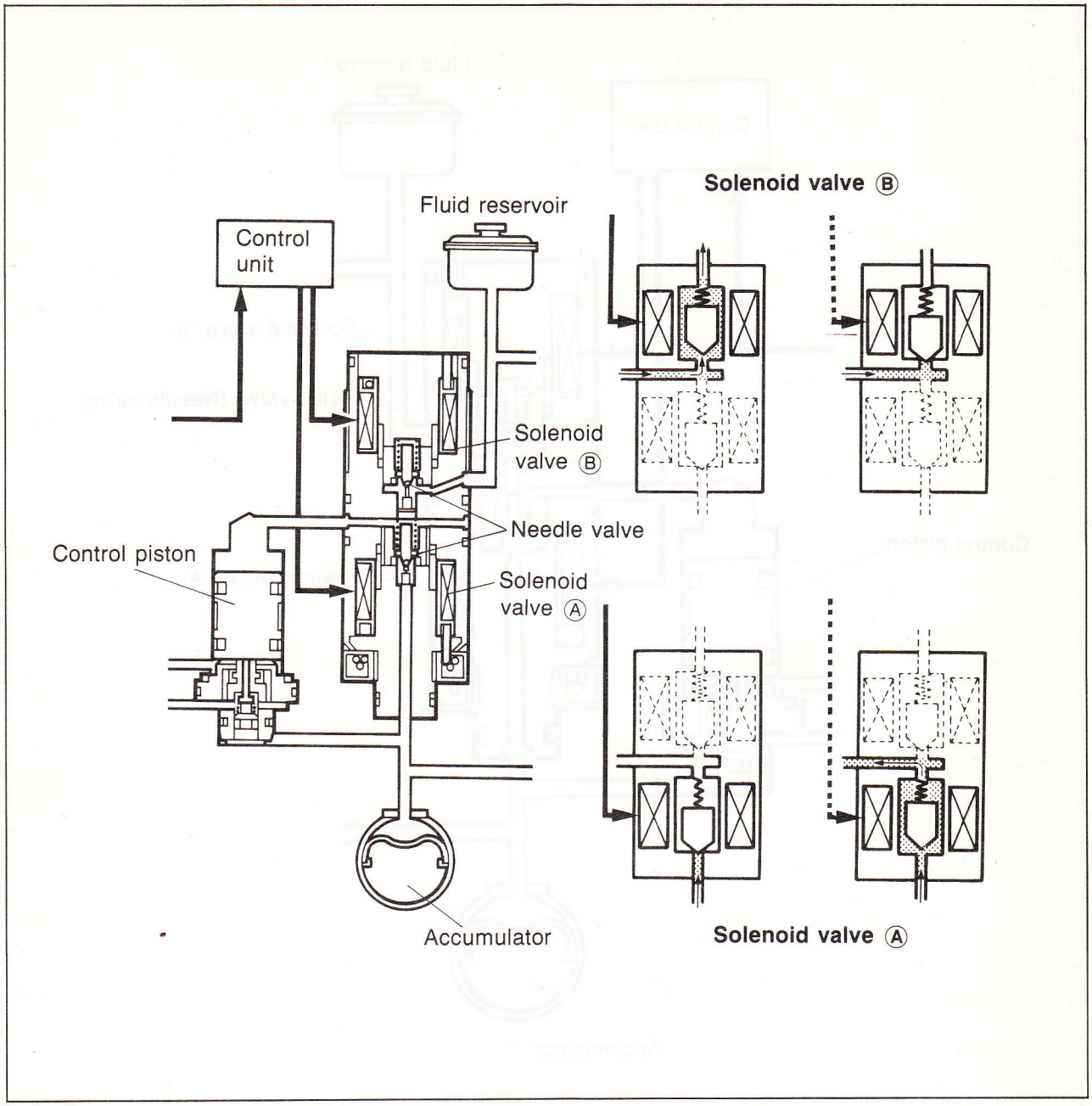

86U11X-514

These solenoid valves control the hydraulic pressure to the control pistons.

Operation

Solenoid valve A

- When current flows, the needle valve is attracted by magnetic force, and the passage between the accumulator and control piston is closed.
- When there is no current, the needle valve is pushed off its seat by the hydraulic pressure in the accumulator, opening the passage to the control piston.

Solenoid valve B

- When current flows, the needle valve is attracted by magnetic force, and the passage between the control piston and the fluid reservoir is opened.
- When there is no current, the needle valve is closed by the spring, closing the passage to the fluid reservoir.

RELIEF VALVE

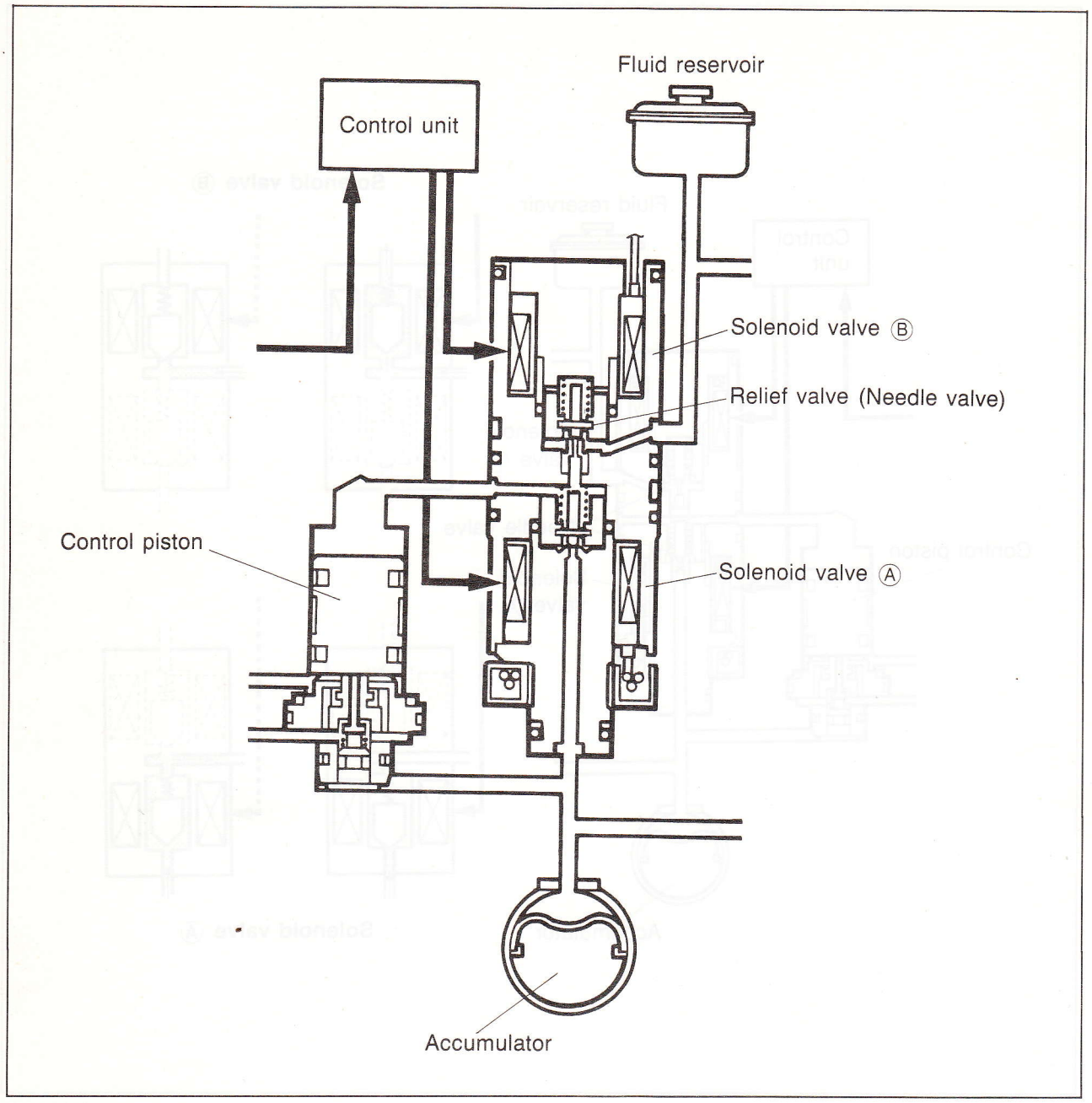

86U11X-515

Solenoid valve B needle valve also acts as a relief valve.
If the accumulator pressure becomes extremely high because of the pump motor continually running due to an electrical circuit failure, the pressure opens the needle valve and opens the accumulator line back to the fluid reservoir, bypassing the control valves and protecting the system from damage. If the pressure again becomes normal, the needle valve is closed by the spring.

CONTROL PISTON AND CUT-OFF VALVES

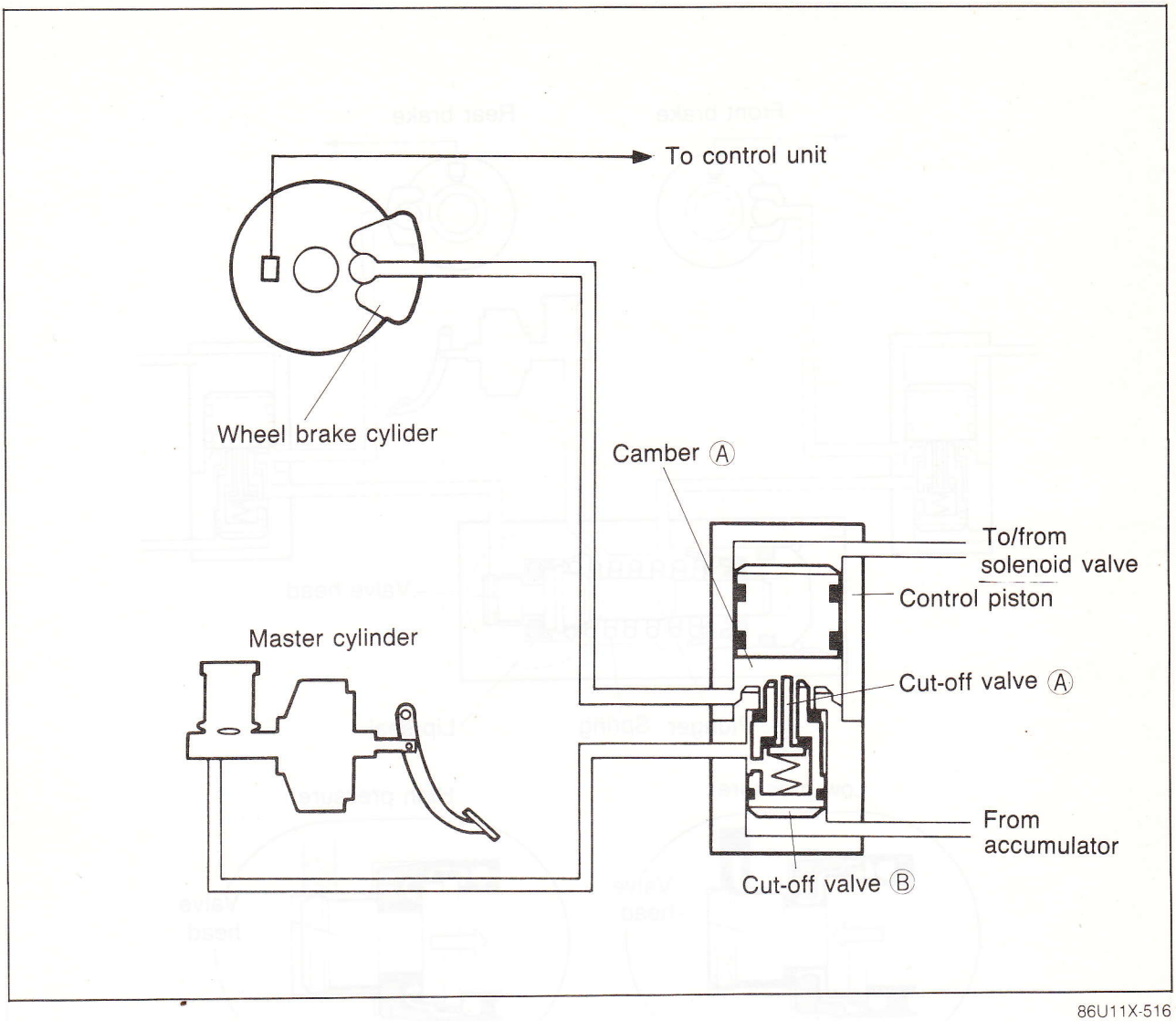

86U11X-516

Control piston
The control piston is moved up and down by the hydraulic pressure controlled by the solenoid valve. Wheel cylinder pressure increases or decreases due to the volume changes of chamber A, caused by movement of the control piston.

Cut-off valve A
When ABS operation begins, the control piston moves up and master cylinder pressure closes cut-off valve A.
When the master cylinder pressure drops, e.g., brakes released during ABS operation, cut-off valve B can not drop immediately due to accumulator pressure under it. At this time, wheel cylinder pressure opens cut-off valve A to allow the fluid to go back to the master cylinder.

Cut-off valve B
When the control piston moves up, cut-off valve B is moved up by the accumulator pressure. The passage between master cylinder and wheel cylinder is then closed. If the system fails, e.g., accumulator pressure suddenly drops during ABS operation, cut-off valve B is pushed down by master cylinder pressure and normal braking is maintained by opening the passage between the master cylinder and wheel cylinder.

PROPORTIONING VALVE

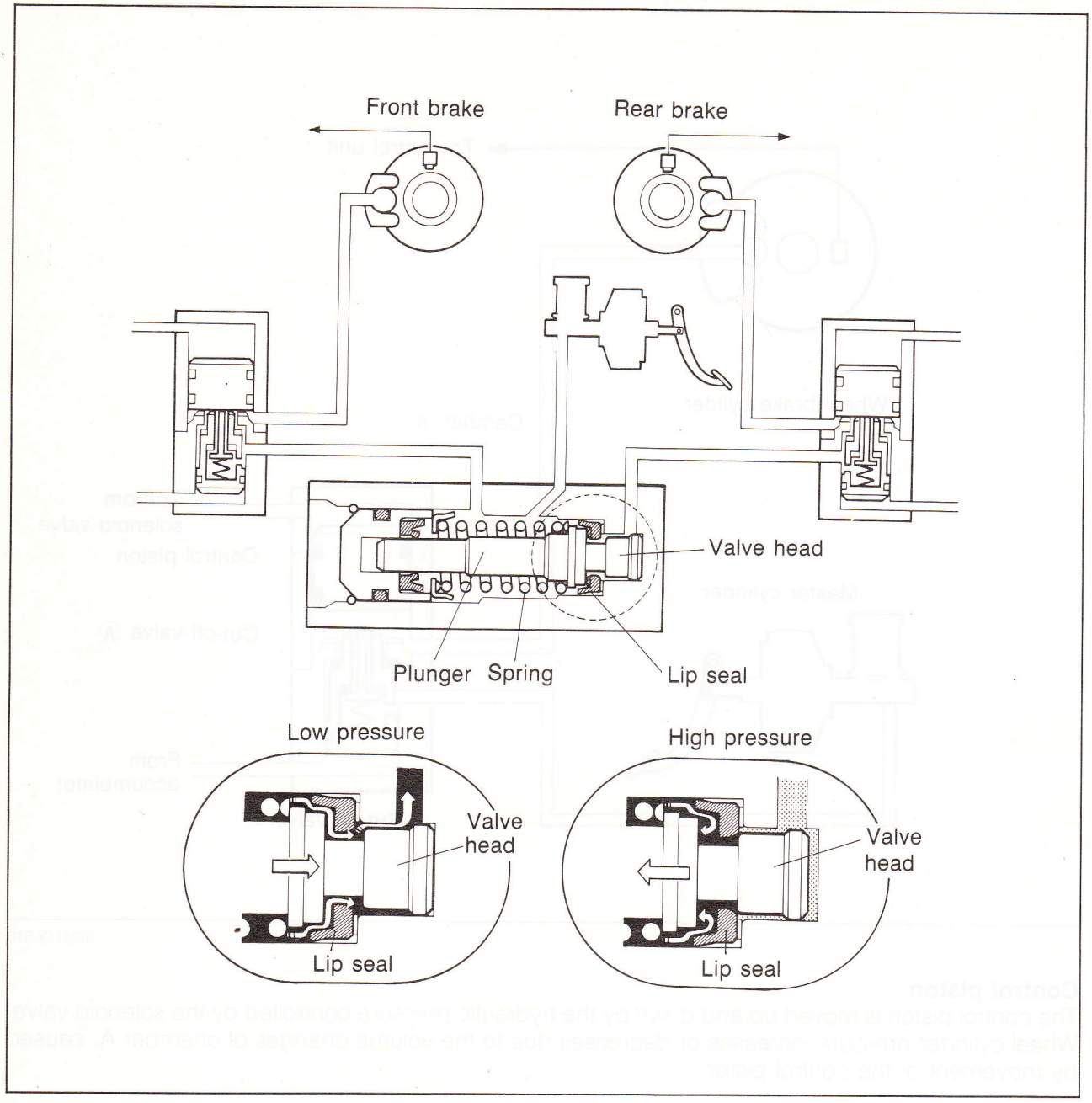

86U11X-517

If the ABS fails, and only normal braking is carried out, proportioning valves are provided in the hydraulic unit to prevent vehicle spin from rear wheel lock-up.

Operation

Low pressure:

The plunger is held to the right by the spring, and master cylinder pressure travels unchanged to the rear brakes.

High pressure:

The pressure between the plunger and lip seal overcomes the spring force and moves the plunger to the left. The valve head limits the pressure to the rear brakes as it closes the outlet port.

ELECTRICAL SYSTEM

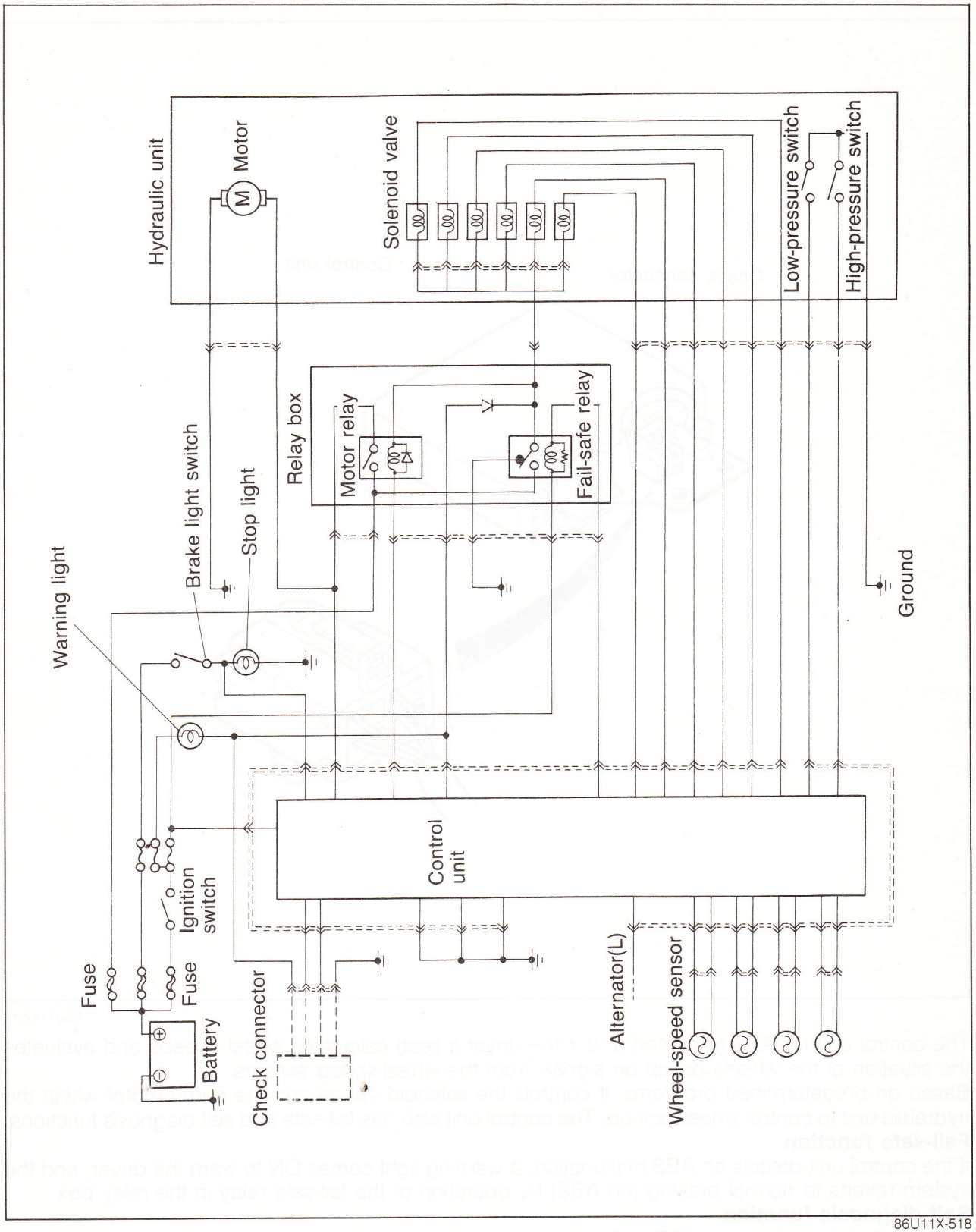

86U11X-518

Electrical system for ABS consists of the control unit, wheel speed sensors, brake light switch, relay box, hydraulic unit, warning light, and wire harnesses.

CONTROL UNIT

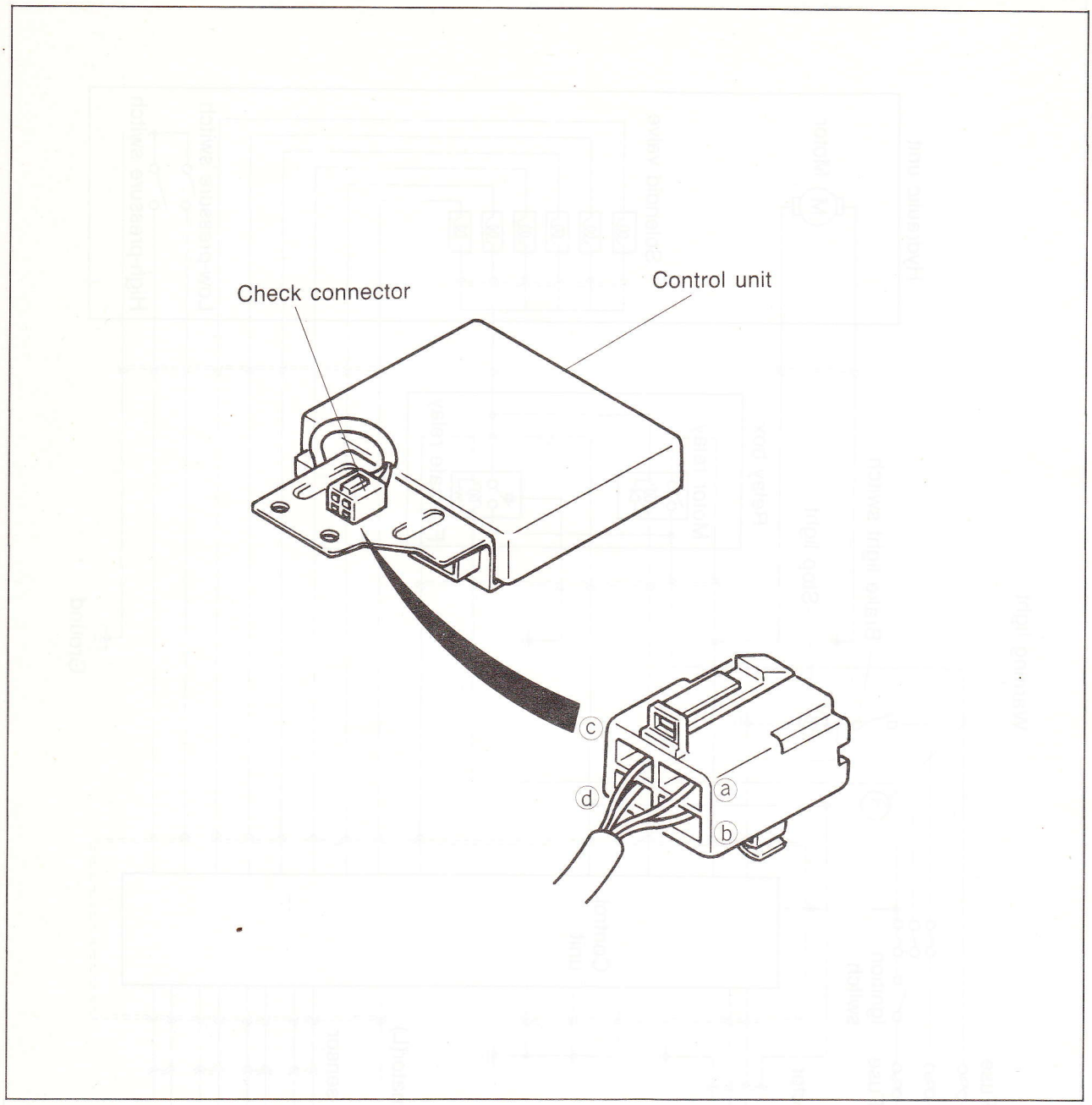

86U11X-519

The control unit for ABS (mounted under the driver's seat) calculates wheel speeds and evaluates the situation of the wheels based on signals from the wheel-speed sensors.
Based on predetermined programs, it controls the solenoid valves and the pump motor within the hydraulic unit to control wheel lock-up. The control unit also has fail-safe and self-diagnosis functions.

Fail-safe function

If the control unit detects an ABS malfunction, a warning light comes ON to warn the driver, and the system reverts to normal braking (no ABS) by operation of the fail-safe relay in the relay box.

Self-diagnosis function

If the control unit detects an ABS malfunction, it stores it in it's memory to later be retrieved. By using the check connector, failures can be diagnosed with the ABS warning light and a voltmeter.
All failures are stored in the memory and are not erased when the ignition switch is turned OFF.

WHEEL-SPEED SENSOR
Structure

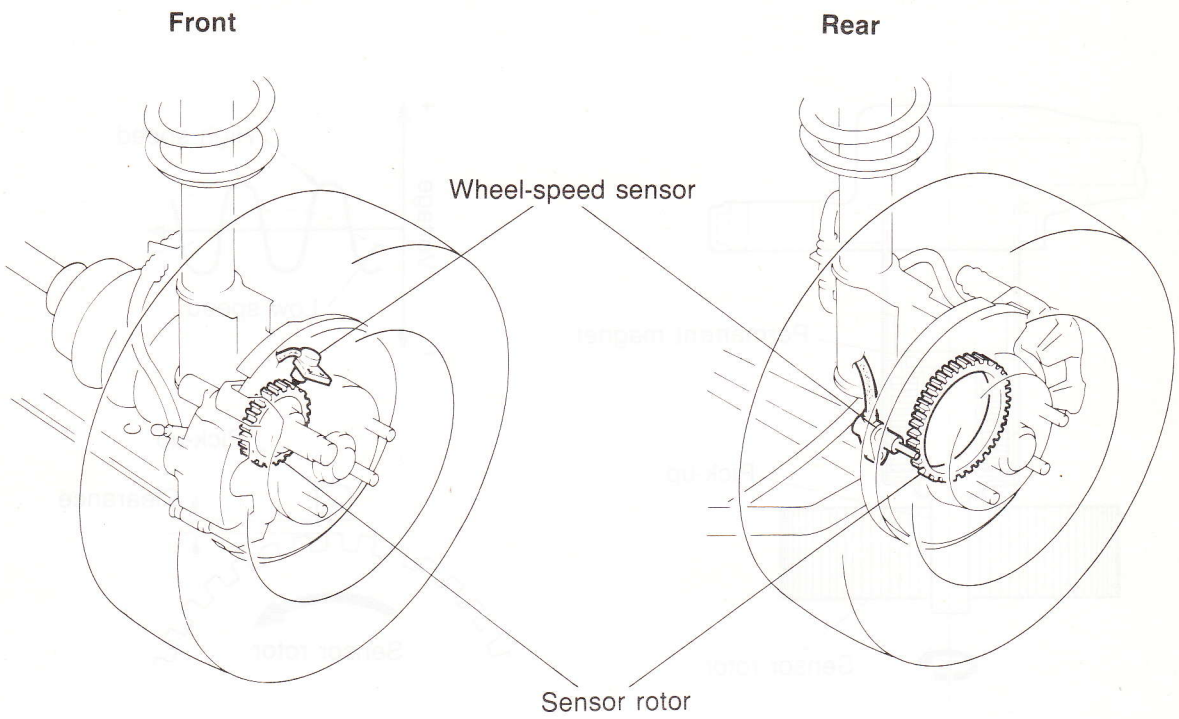

86U11X-520

The wheel-speed sensors for the front and rear wheels are installed on the knuckles. These produce electrical pulses by monitoring the rotation of the sensor rotor installed on the driveshaft or the wheel hub.

Function

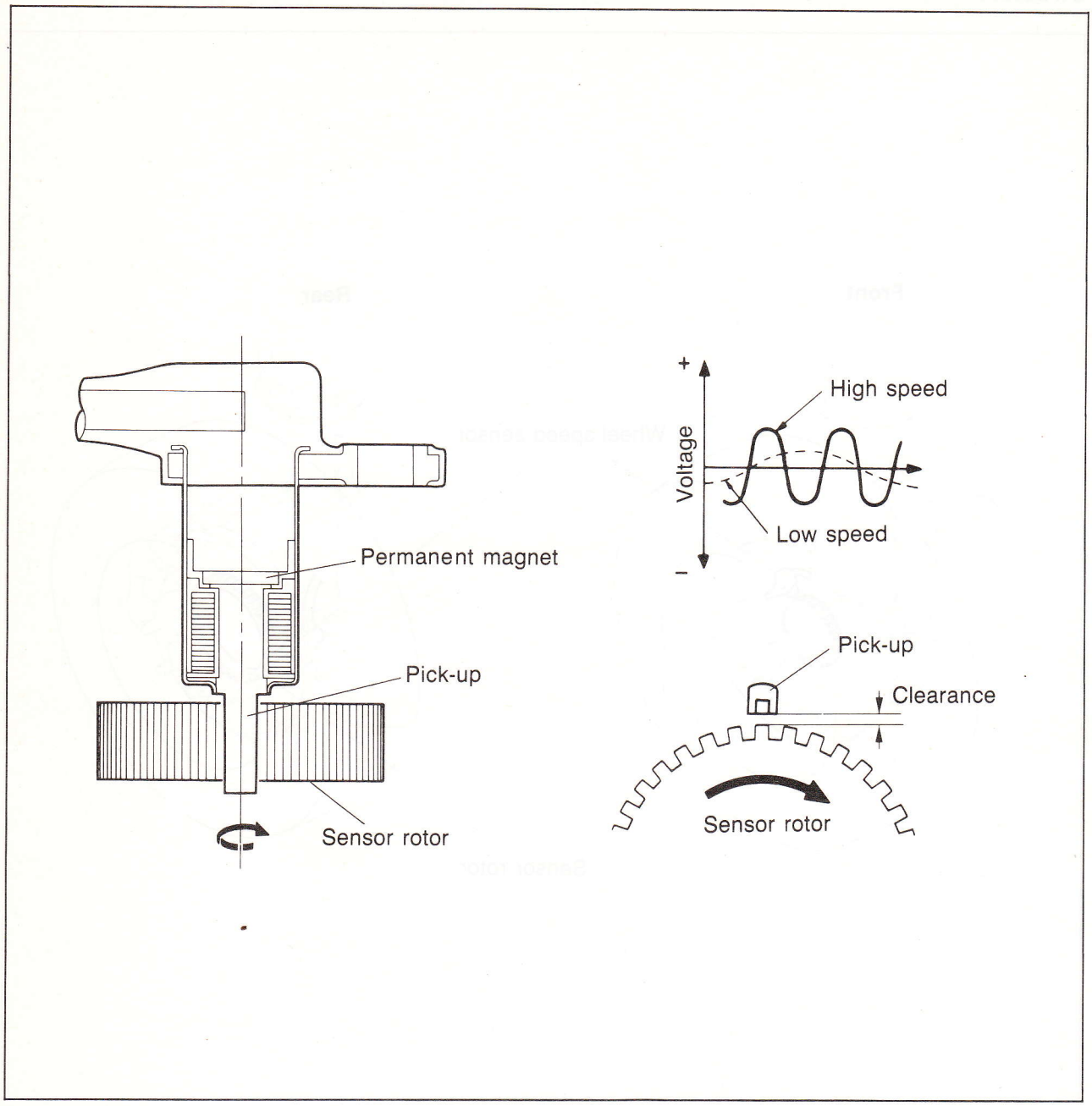

86U11X-521

The sensor rotor on the wheel hub or driveshaft interrupts the magnetic fields of the wheel-speed sensor. This produces AC voltage which changes as the wheel speed changes. These voltage waves are sent to the control unit as wheel-speed signals.
The sensor is mounted so that there is a small clearance between the speed sensor pick-up and the sensor rotor.

PRESSURE SWITCH

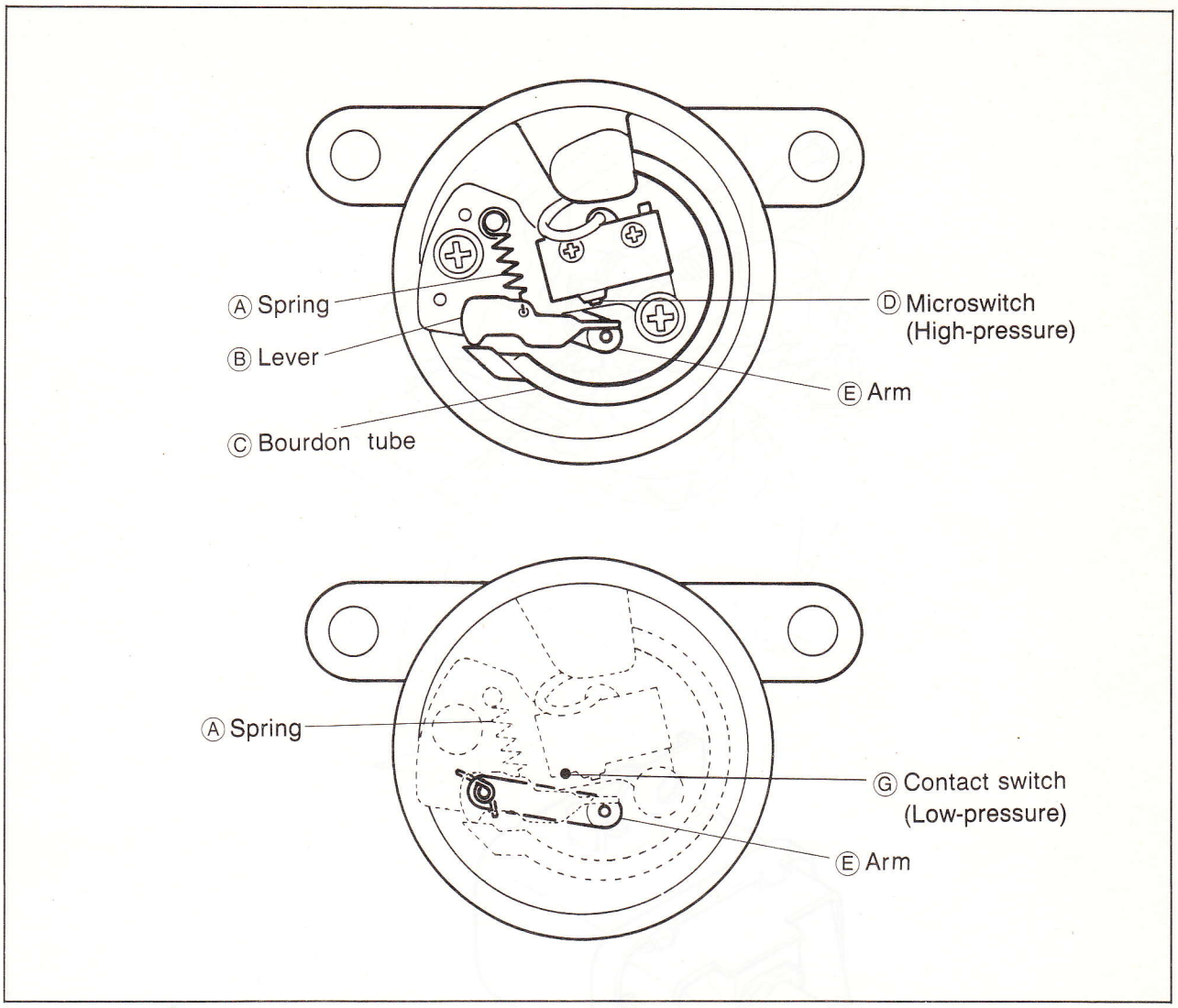

86U11X-522

The hydraulic unit has a microswitch and a contact switch.
The microswitch is activated at high pressure and the contact switch is activated at low pressure. If the ABS system hydraulic pressure becomes lower than the specified pressure, the contact switch opens and prevents the pump motor from operating continuously.

Operation

1. Abnormally low pressure: less than 12,263 kPa (125 kg/cm^2, 1,778 psi)
The bourdon tube tip C pushes lever B.
The lever releases the microswitch D and contact switch arm E is pushed down.
The contact switch G is opened, turning the warning light ON and preventing pump motor operation.

2. Operating pressure: 12,263—21,582 kPa (125—220 kg/cm^2, 1,778—3,128 psi)
The bourdon tube begins to straighten due to the increased internal hydraulic pressure. The microswitch remains open; however, due to spring A on the arm, the contact switch closes and cancels the warning light and allows pump motor operation.

3. Cut-off pressure: 19,620—21,582 kPa (200—220 kg/cm^2, 2,844—3,128 psi)
The bourdon tube straightens further and allows the lever to contact the microswitch, turning off the pump motor.

RELAY BOX

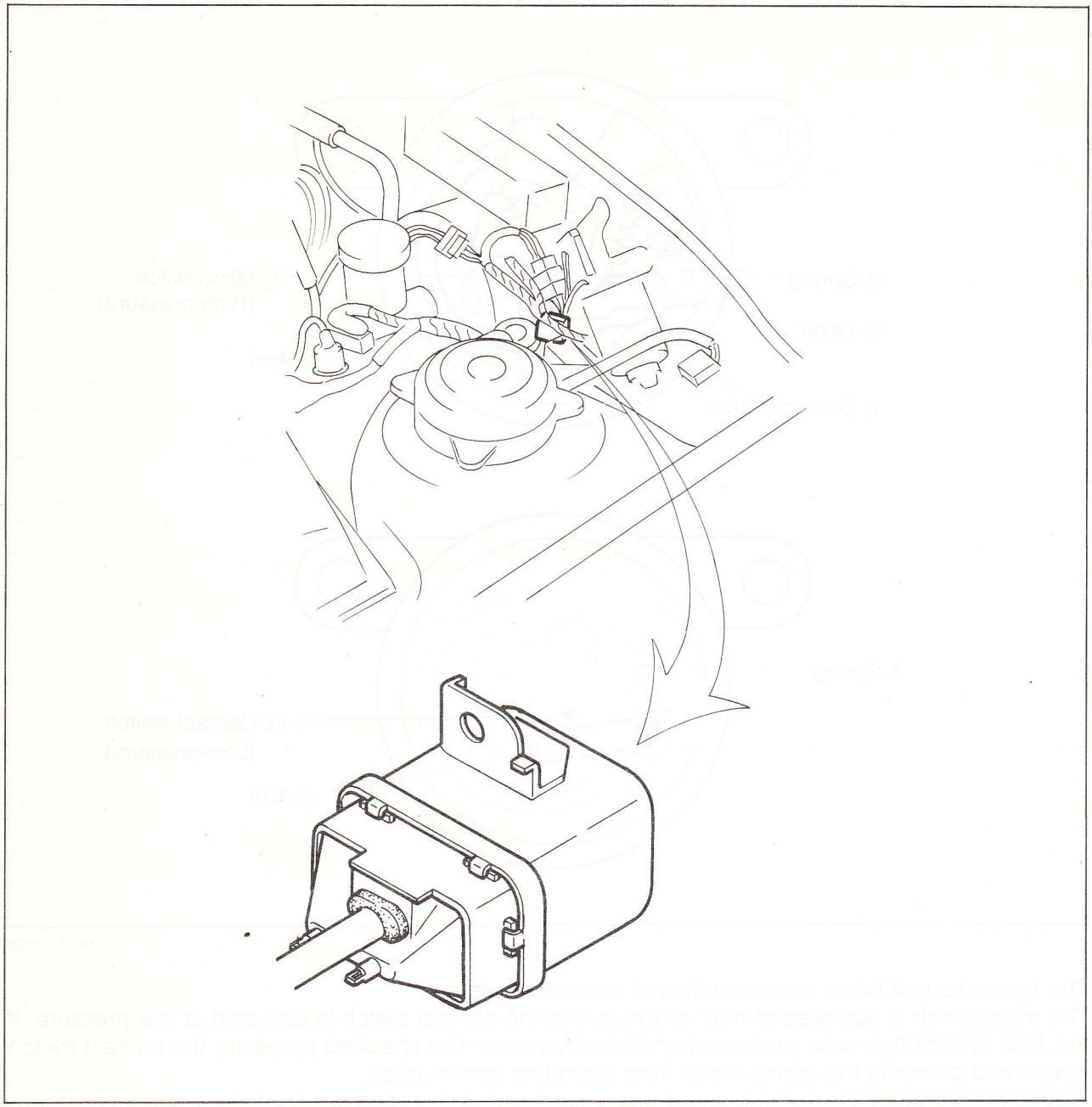

86U11X-523

This relay box, mounted in the engine compartment, has the following functions:

Motor relay

Closes the pump motor circuit to build up hydraulic pressure in the hydraulic unit.

Fail-safe relay

Supplies the solenoids and motor relay with electrical power under normal conditions.

Cuts power to ABS system if failure occures, and assures normal brake operation.

ABS CONTROL SYSTEM

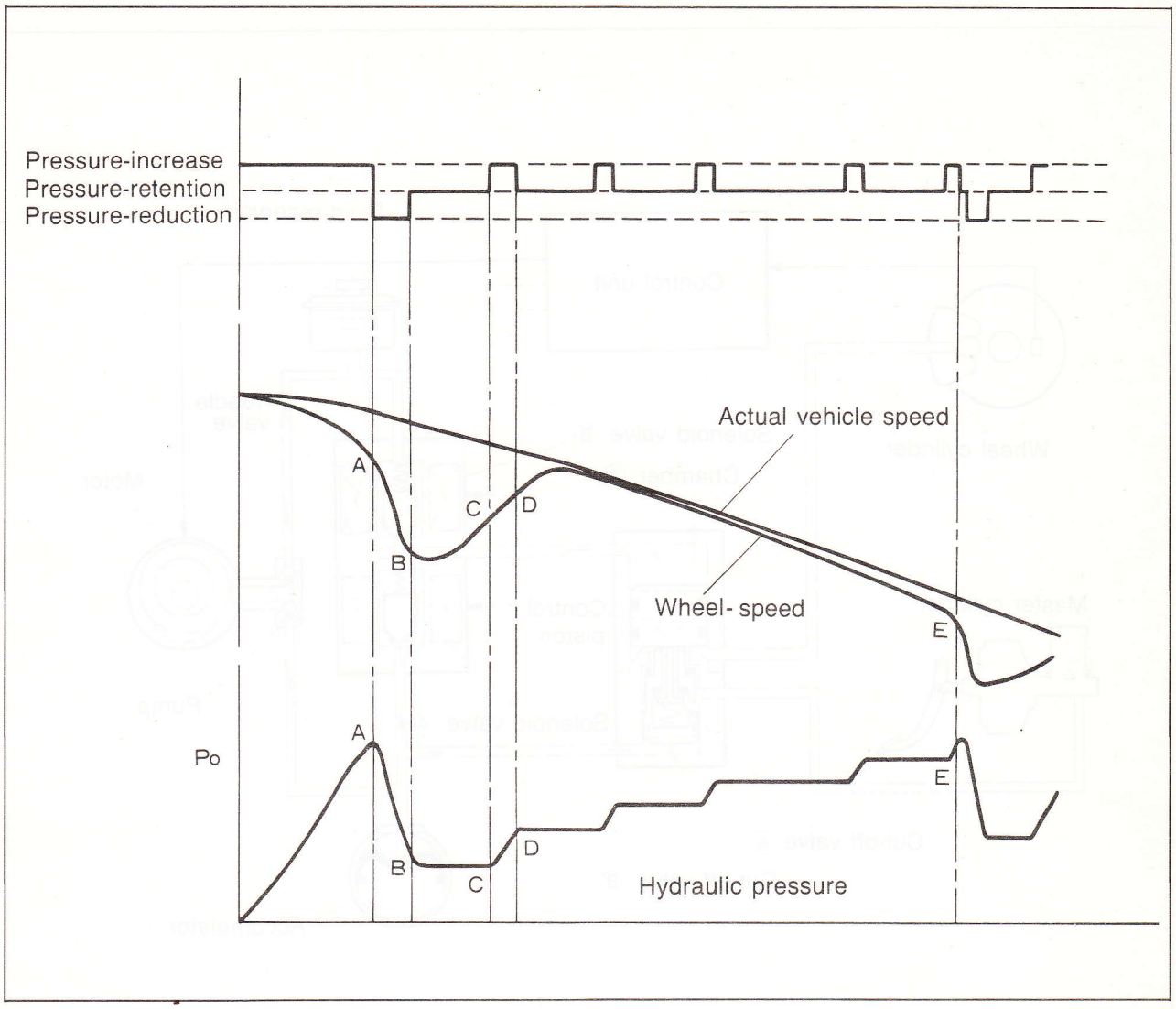

86U11X-524

The control unit computes the rotational speed of each individual wheel, based upon signals received from the four wheel-speed sensors, and also computes the wheels' deceleration and acceleration, and thereafter projects an estimate of the vehicle speed.
The control logic is explained in a simple manner based on the illustration above.
When the brake pedal is firmly depressed, the speed of the wheel begins to decrease, which is subsequently followed by a tendency toward locking up (point A).
At that point, the control unit, in order to check for wheel lock-up, computes the wheel slippage ratio, (the difference between the projected estimate of vehicle speed and the wheel speed) and compares the results with the preset formula for determination of lock-up.
If it exceeds the preset value, the control unit sends a pressure-reduction command to reduce the brake hydraulic pressure. When the hydraulic pressure is reduced, the speed of the wheel begins to increase (point B), and the control unit concludes that the wheel may recover its speed.
It therefore sends a pressure-retention command to hold the current hydraulic pressure.
When the wheel-speed reaches point C, the control unit concludes that the wheel is no longer in danger of locking up, and sends a command for increasing braking pressure.
The hydraulic pressure is then increased by repetition of increase and retention commands to regulate the braking force (point C-E).
If the wheel tends to lock again (point E), the cycle begins again to control wheel speed.

OPERATION OF ANTI-LOCK BRAKE SYSTEM
Normal Braking

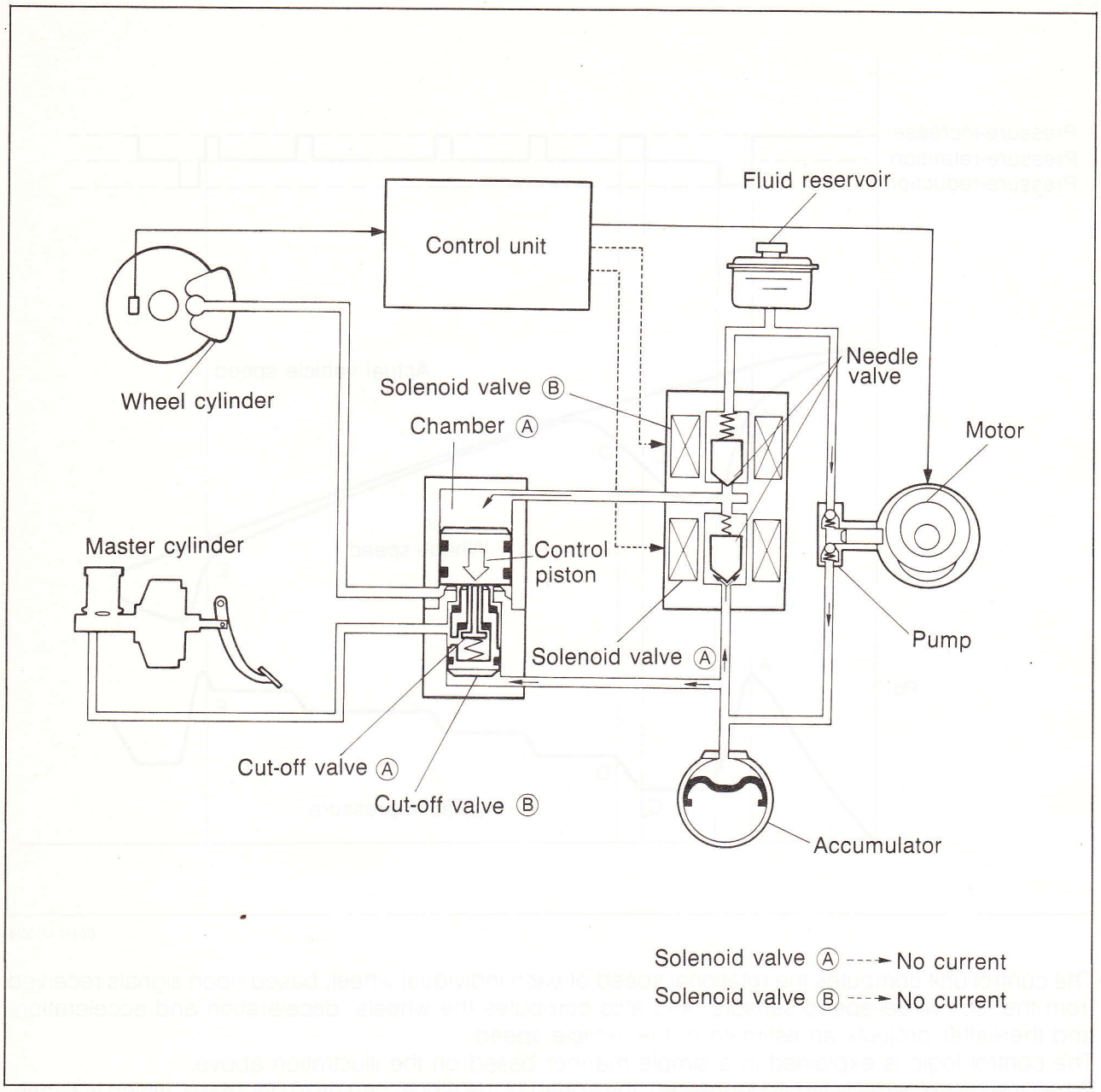

86U11X-525

During normal braking, there is no current flow to either solenoid valve A or B. Solenoid valve B needle valve is held closed by spring pressure and solenoid valve A needle valve is pushed open by accumulator pressure.

As a result, accumulator pressure passes through solenoid valve A and flows to chamber A; pushing the control piston downward. In addition, accumulator pressure also pushes against the bottom of cut-off valve B.

When the surface area of the two pistons to which pressure is applied is compared, that for the control piston is greater, with the result that cut-off valve B and the cut-off valve A are held down.

Thus, the hydraulic pressure of the master cylinder passes between cut-off valve B and the body and between cut-off valve B and cut-off valve A, and flows to the wheel cylinder.

Pressure-reduction

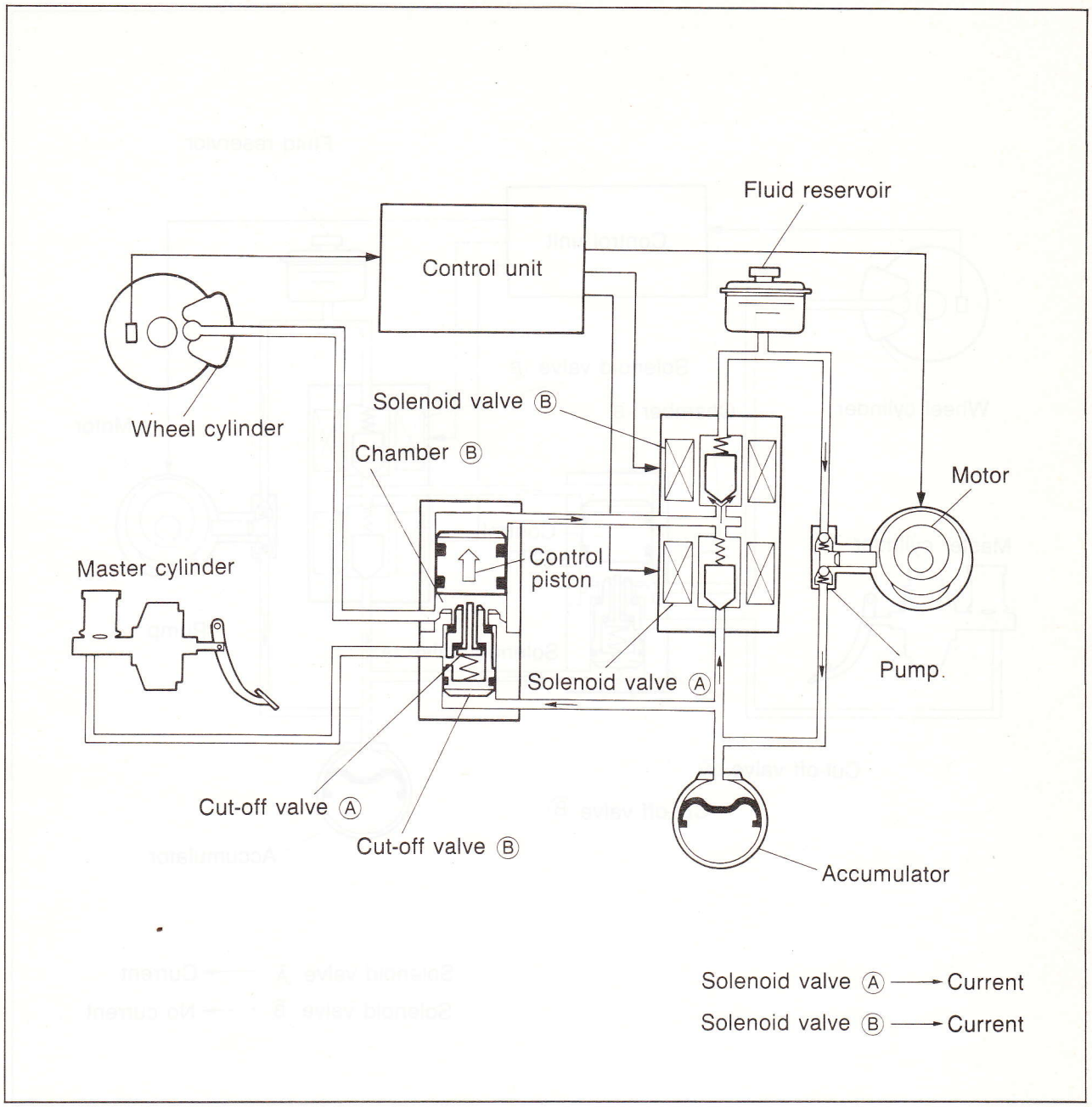

86U11X-526

When the wheel cylinder hydraulic pressure increases and the wheel is about to lock, the control unit transmits a command for pressure reduction to the solenoid valves.
As a result of that command, there is current flow to both solenoid valves A and B; solenoid valve A closes and B opens. Accumulator pressure pushes cut-off valve B upward as accumulator pressure in chamber A is drained out to the fluid reservoir. Cut-off valve B then closes off the passage between it and the body. At the same time valve A closes to cut-off master cylinder pressure to the wheel cylinder. At this time wheel cylinder pressure pushes the control piston further upward, and because of the volume increase of chamber B, the wheel cylinder pressure drops, causing a reduction in wheel braking.

Pressure-retention

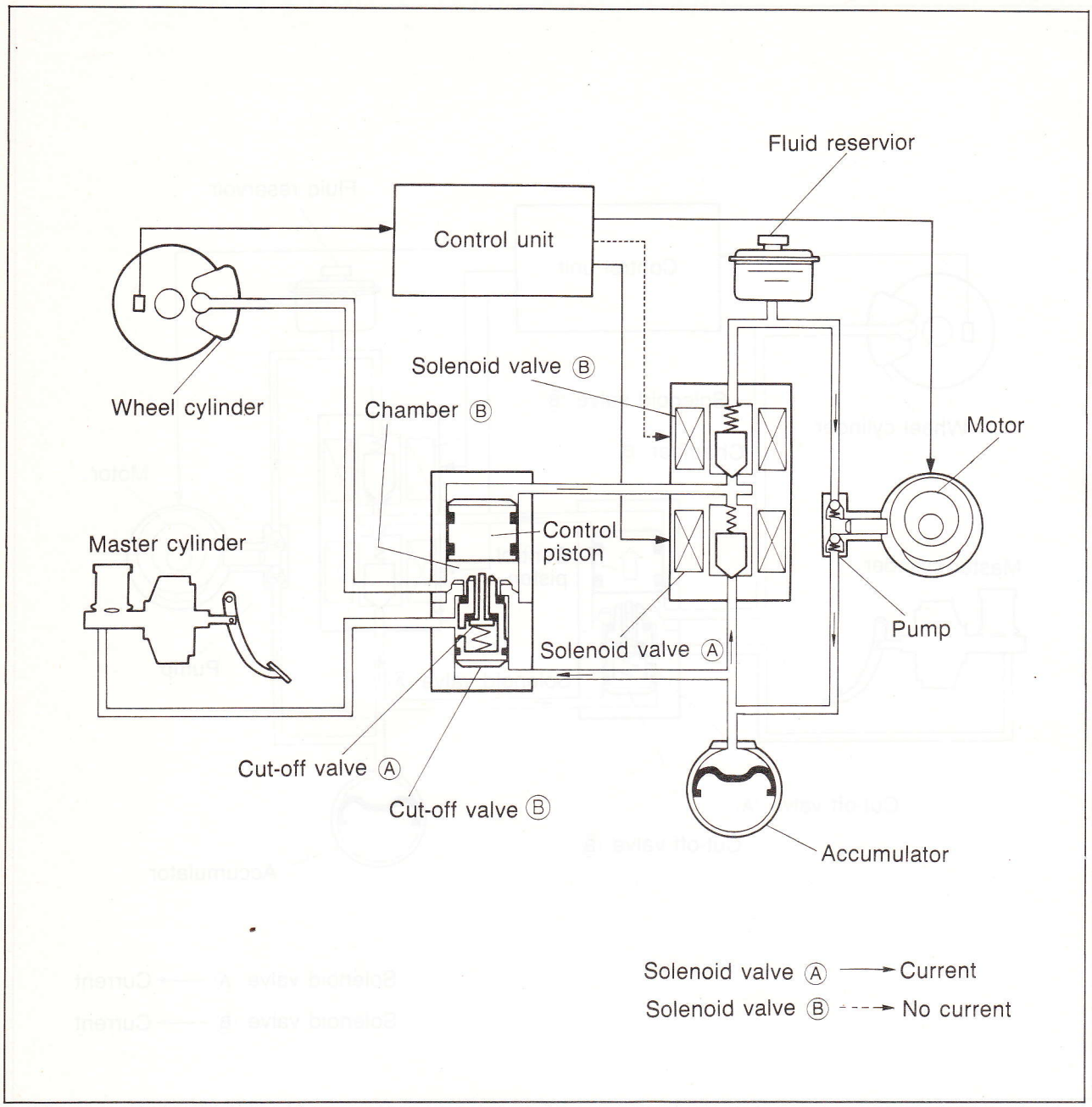

86U11X-527

When the control unit transmits a command for pressure retention, the result is that there is no longer current at solenoid valve B but there is current at solenoid valve A.
As a result, both valves close, and the pressure of chamber B is retained. In addition, cut-off valves B and A are held upward by the accumulator pressure; separating the master cylinder and wheel cylinder.

Pressure-increase

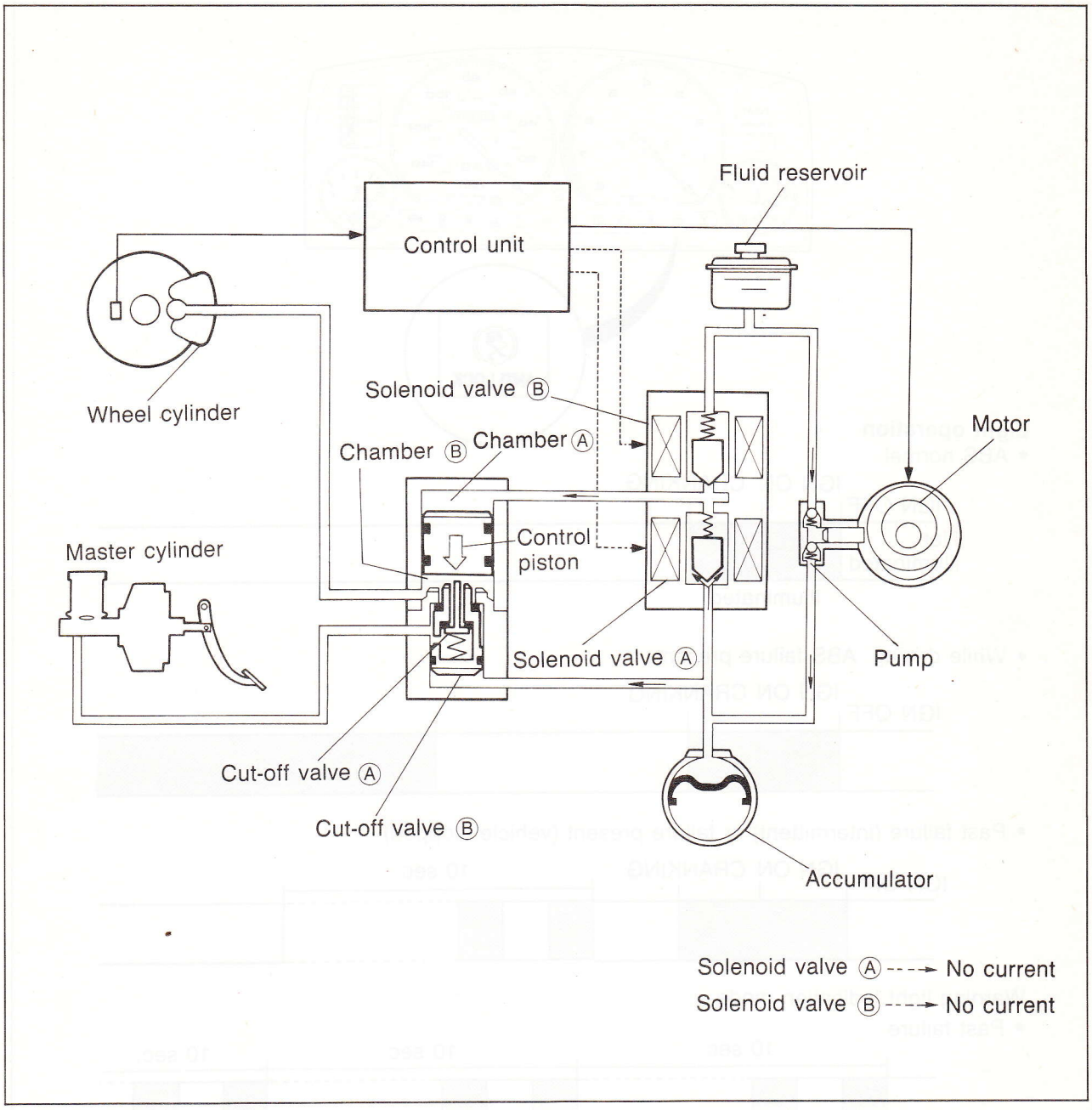

86U11X-528

When the pressure-increase command is received from the control unit, there is then no longer current at either solenoid valves B or A.
As a result, solenoid valve B closes and solenoid valve A opens. Accumulator pressure pushes against the cut-off valve B and the control piston. The control piston receives the greater force and moves down compressing the fluid in chamber B and increasing wheel cylinder pressure.

ANTI-LOCK BRAKE WARNING LIGHT

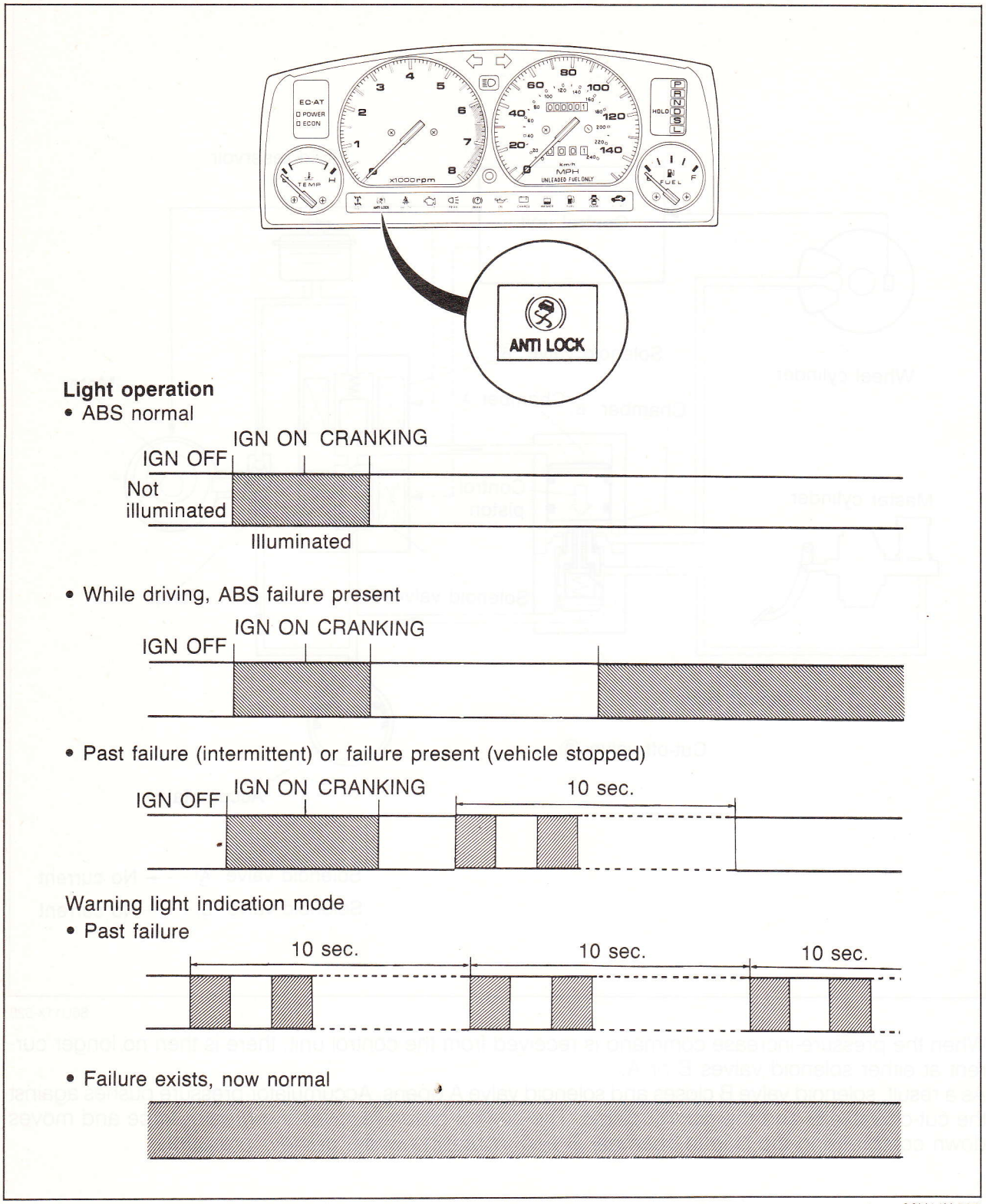

86U11X-529

The ABS warning light is located in the instrument panel warning light cluster. If it illuminates while driving, it indicates that there is a problem in the ABS.

* A past failure is indicated one time each time the engine is started. The flash pattern is the same as the warning light indication mode (Refer to next page.)

Diagnosis indication mode

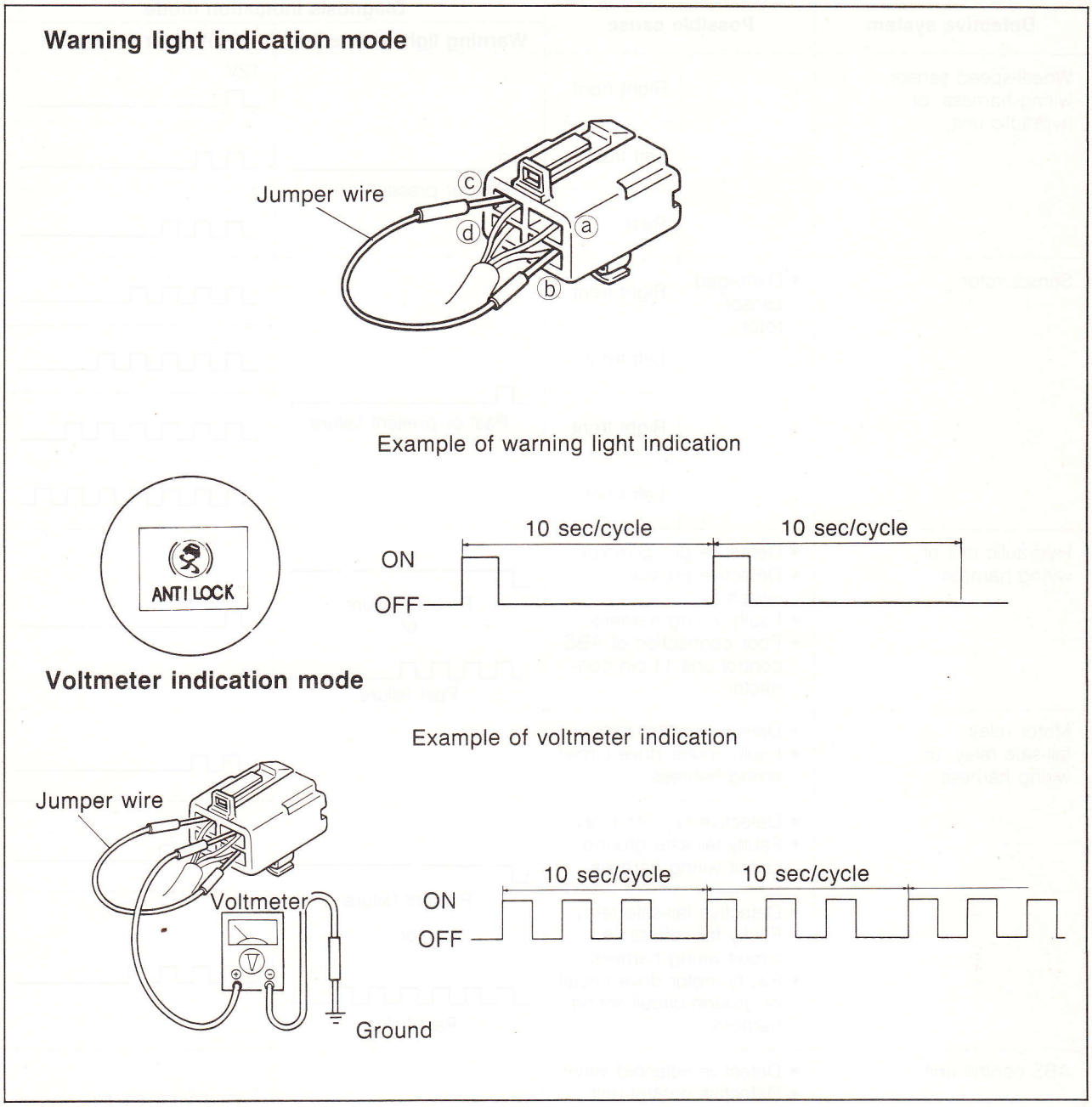

86U11X-530

Past or present failures are shown by jumping terminal b to ground terminal c (warning light indication mode).
After it is determined which system is defective, the failed component is identified by voltage fluctuations of a voltmeter connected to terminal a.

Note

a) Check with the ignition switch ON.

b) During diagnosis indication mode, the warning light will illuminate, and the voltmeter will indicate 0V when there is no past or present failure.

c) All failures are stored in the control unit memory. The memory must be cancelled after repairs are made. (Refer to page 11—33)

TROUBLESHOOTING GUIDE

Defective system	Possible cause		Diagnosis indication mode	
			Warning light indication	Voltmeter indication
Wheel-speed sensor, wiring harness, or hydraulic unit		Right front	Past or present failure	12V
		Left front		
		Rear		
Sensor rotor	• Damaged sensor rotor	Right front	Past or present failure	
		Left front		
		Right front		
		Left front		
Hydraulic unit or wiring harness	• Defective pump motor • Defective pressure switch • Faulty wiring harness • Poor connection of ABS control unit 11-pin connector		Present failure or Past failure	
Motor relay, fail-safe relay, or wiring harness	• Defective motor relay • Faulty motor drive circuit wiring harness		Present failure or Past failure	
	• Defective fail-safe relay • Faulty fail-safe ground circuit wiring harness			
	• Defective fail-safe relay • Faulty fail-safe drive circuit wiring harness • Faulty motor drive circuit or ground circuit wiring harness			
ABS control unit	• Defective solenoid valve • Defective control unit			
	• Defective control unit			
	• Defective control unit		Present failure	No signal during diagnosis mode because failure conditions do not store in memory
	• Poor connection of ABS control unit 17-pin connector		Present failure	
Others	• Insufficient battery capacity		Present failure	
	• Low alternator voltage output			

* Perform test with wheels stopped.

86U11X-531

Memory cancel

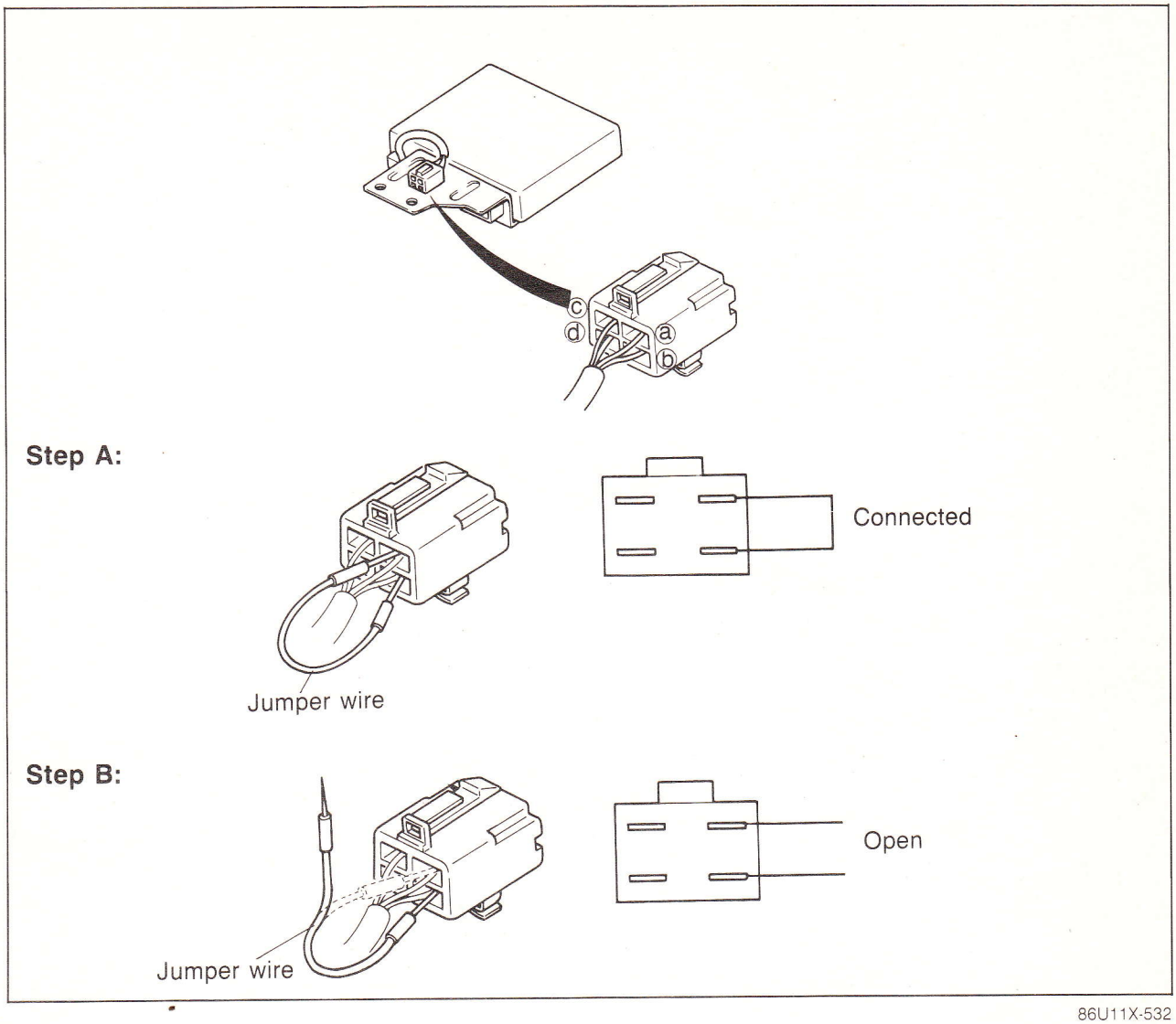

86U11X-532

The memory of failures must be cancelled after repairs have been made to the ABS.
Erase the memory as follows:

Step A:

1. Connect a and b terminals with a jumper wire.
2. Turn the ignition switch ON.
3. Check that warning light is illuminated, and wait 1—2 seconds.
4. Turn the ignition switch OFF.

Step B:

5. Disconnect the jumper wire from terminal b.
6. Start the engine.
7. Turn the ignition switch OFF after the warning light goes OFF.

Note

1. **One failure condition is erased each time steps 1—7 are taken. Since the memory has the capacity of storing 32 failures, repeat the process if the warning light flashes after step 6.**
2. **Repeat the steps until all memories have been cancelled.**
3. **The memory in the control unit is not cancelled when the battery is disconnected.**